INKOMA - GROUP

SDA - Spindle direct drive actuator

ALBERT

Maschinenfabrik ALBERT GmbH
Technologiepark 2
A - 4851 Gampern - Austria

phone: +43/(0)7682-39080-10
fax: +43/(0)7682-39080-99
e-mail: office@albert.at
internet: www.ALBERT.at

We reserve the right to make technical changes.
2014-1-MP-OE-e © INKOMA-GROUP

Product description

ALBERT SDA - Spindle direct drive actuator

The ALBERT SDA is a modular direct drive linear actuator system for use in a wide range of applications and industries. The actuators can operate with fast linear speeds and high duty in high load conditions.
The SDA can be used as a single drive linear actuator. Alternatively, as high precision motion control with synchronisation between axis is possible, the SDA is a perfect solution as part of a multi-axis system.

Available in 4 different sizes with a fully modular construction and vast array of accessories, the SDA can be configured to achieve bespoke application requirements.

The SDA has a rigid construction with a fully sealed housing, equipped with robust axial and radial bearings and lifetime lubrication. The use of a pivoting bracket attached to the housing, coupled with a range of different spindle ends ensures a pivoting motion is possible. As the SDA is an electromechanical linear solution there is no possibility of oil or air leaks as associated with hydraulic and pneumatic cylinders.
The basic SDA version comprises of a self-locking trapezoidal spindle and running nut. The input shaft can be connected to a suitable motor and coupling to complete the drive arrangement.
The SDA is also available as a fully enclosed linear actuator solution where the spindle is enclosed within a cover tube and the running nut is attached to a push rod. The cover tube also has a guide bush fitted to help guidance of the push rod.

As the construction of the SDA is fully modular a range of motor mounting flanges, bell housings and couplings are available to connect various motor designs. For faster linear speeds and higher duty capability ball screw versions are available across the entire SDA range.

Accessories:
- Lifting limitation
- Safety nut
- Pivot mounting
- Motor adaptors
- Flanged bearings
- Rotation prevention
- Pivot pins
- Couplings
- Flanges
- Support bearings
- Various front attachments and more.

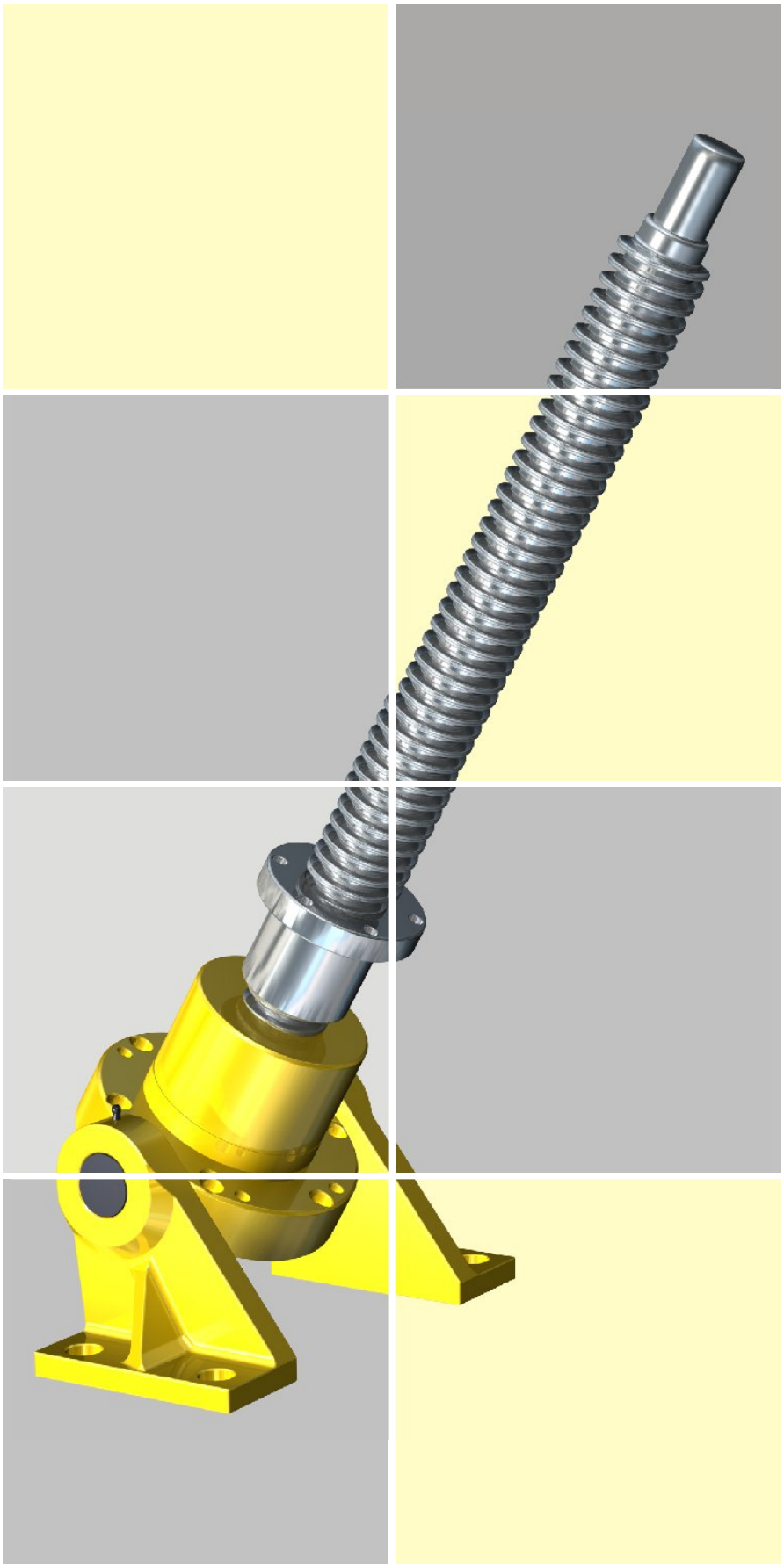

Contents list

SDA - Spindle direct drive actuator - basic version and tube design

Technical information

page 91

design features
examples
versions

Dimensions SDA-B

page 92 - 93

SDA10-B, SDA25-B, SDA50-B, SDA100-B
SDA basic version with trapezoidal spindle

Dimensions SDAK-B

page 94 - 95

SDAK10-B, SDAK25-B, SDAK50-B, SDAK100-B
SDA basic version with ball screw spindle

Dimensions SDA-R + SDAK-R

page 96 - 97

SDA10-R, SDA25-R, SDA50-R, SDA100-R
SDAK10-R, SDAK25-R, SDAK50-R, SDAK100-R
SDA tube design

Dimensions

page 98

SDA motor adaptor

Technical information / calculations

page 99

lifting reserve, protective measures
input power $P_{in.}$ [kW], life calculation L_h [h]

Input power - torque

page 100 - 103

input power $P_{in.}$ [kW]
permitted input torque to worm shaft $M_{in.}$ [Nm]

Calculations

page 104

critical spindle speed $n_{crit.}$ [1/min]

Calculations

page 105 - 106

critical buckling loads $F_{crit.}$ [kN] on the spindle

Technical information

Design features

• max. dynamic axial forces of the sizes:

SDA10	SDA25	SDA50	SDA100
12,5kN	25kN	50kN	100kN

• lifting speed from 0,5 m/min to 30 m/min depending on load and duty

• self-locking due to trapezoidal design

• life-time lubrication due to high-quality long life grease and encapsulated housing design

• stroke lengths according to customer requirements (allowing for critical buckling and rotational speed values)

• electronic synchronisation of multiple actuators is possible

• special spindle diameters, leads and multi-start threads are possible

Examples

The ALBERT SDA is an economical drive solution

• in mechanical engineering as dynamic feed drives for horizontal, inclined or vertical lifting movements

• in building engineering, automated handling and automobile manufacturing for dynamic linear adjustment movements

• for locks and sewage treatment facilities - in particular the ALBERT SDA tube version in the enclosed design provides protection against contamination

• in the food and paper industry, aerospace engineering, crane construction, for all external applications

If you have any questions or problems, just call on our engineers and field representatives for support. We will be happy to advise you or provide our experience for preparing actuator specifications.

Versions

SDA basic version

• **SDA-B with trapezoidal spindle**
• **SDAK-B with ball screw spindle**

The SDA basic versions are equipped with either a self-locking trapezoidal spindle or ball screw spindle with mating flanged nut. The input shaft can be connected to a suitable motor and coupling to complete the drive arrangement.

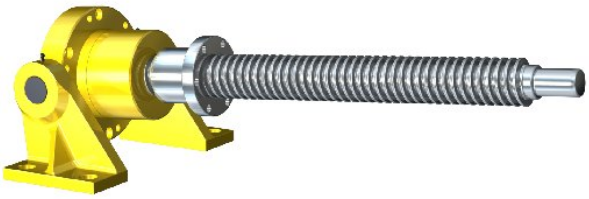

SDA tube design

• **SDA-R with trapezoidal spindle**
• **SDAK-R with ball screw spindle**

The SDA tube design has a fully enclosed spindle and nut with a corrosion proof cover tube and push rod.

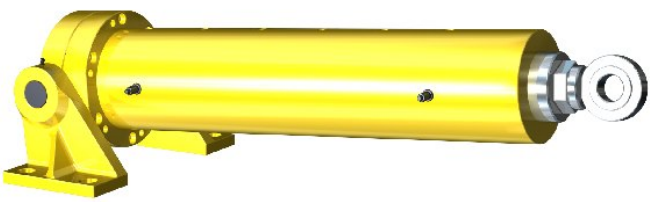

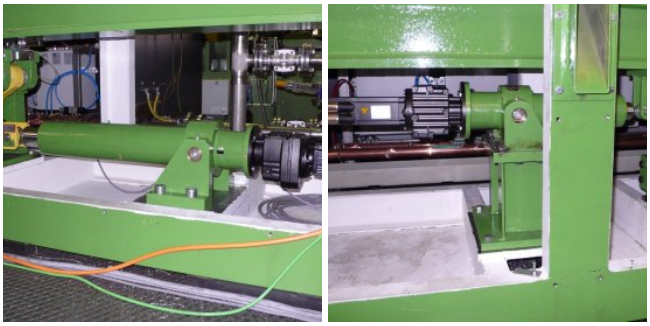

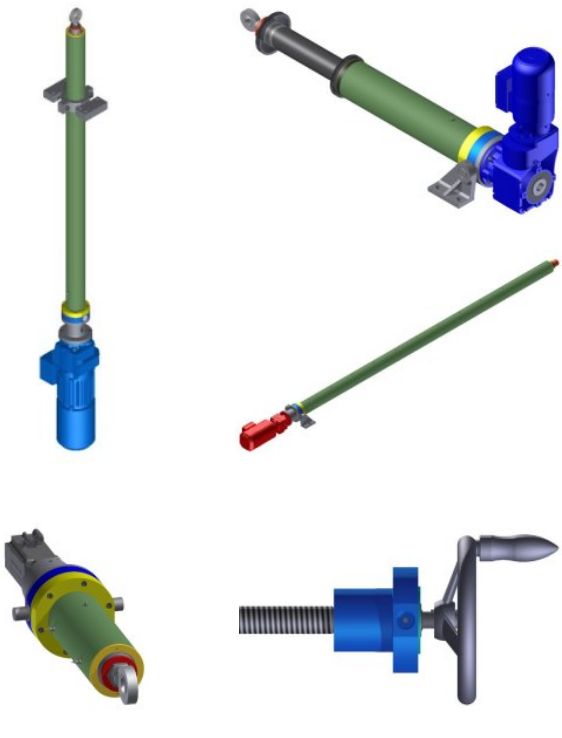

Dimensions SDA10-B, SDA25-B, SDA50-B and SDA100-B

Basic version with trapezoidal spindle

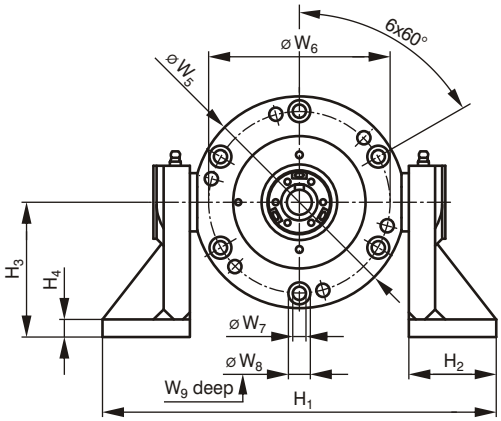

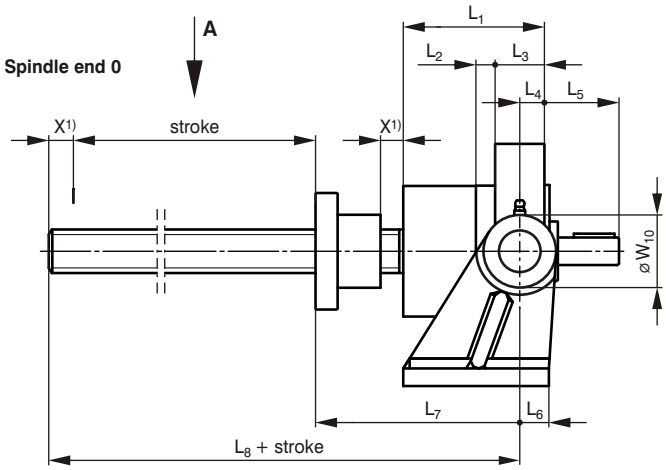

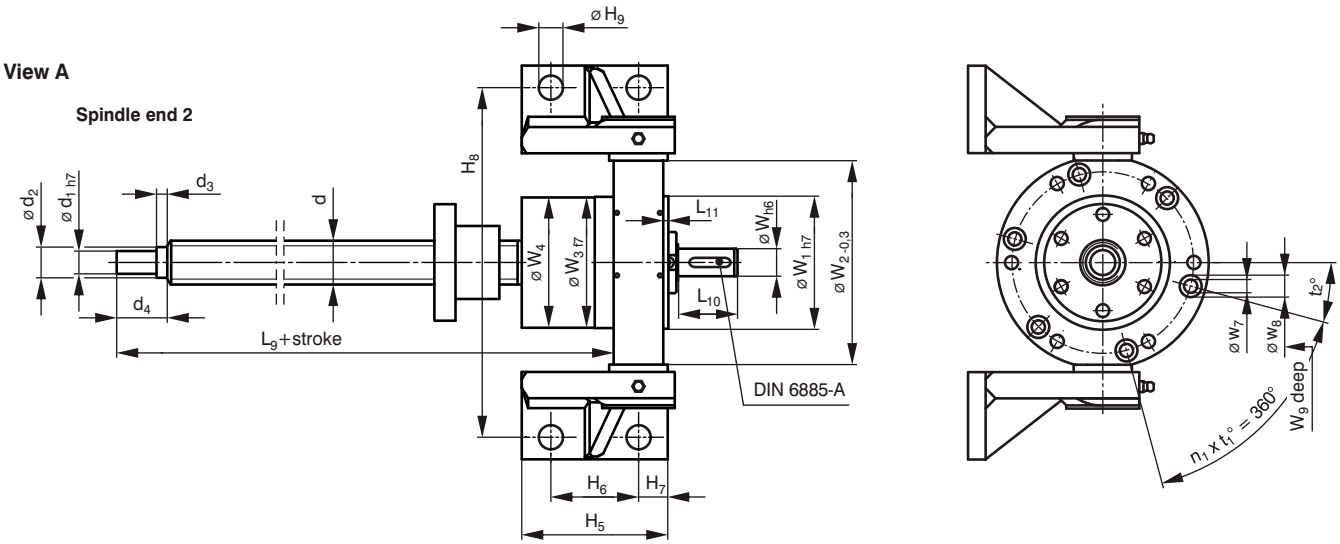

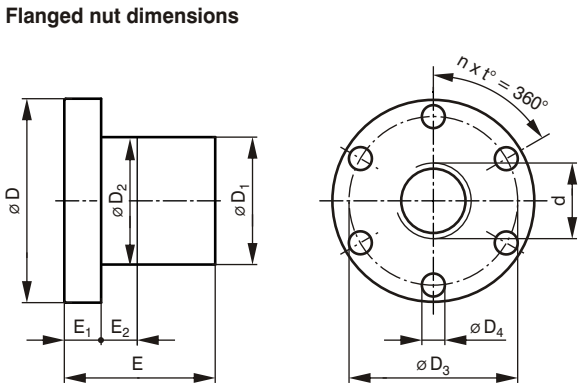

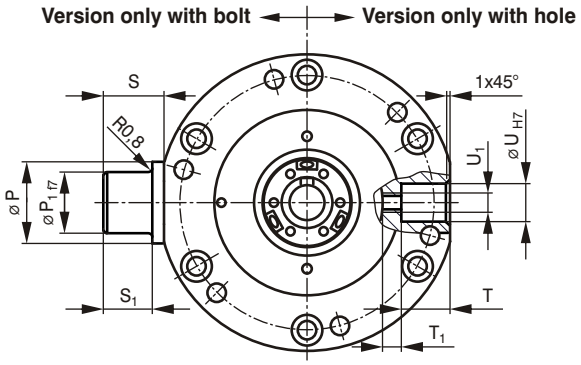

Ordering example:

- Spindle direct drive actuator with trapezoidal spindle
- Size
- Basic version
- Spindle
- Stroke length 300 mm
- Spindle end

SDA50 - B - 40x7 - 300 - 2

Initial selection table

Order code	max. tensile / compressive load F_{max} [kN]	Spindle d [mm]	Lift per revolution [mm/rev.]	dyn. load rating of axial bearing $C_{dyn.}$ [kN]	increased dyn. load rating of axial bearing $C_{inc.dyn.}$ [kN]	max. input power at an ambient temperature of 20°C and 20% duty ED (%/h) $P_{in.}$ [kW]	Overall efficiency $\eta_{tot.}$ [%]	Basic mass SDA(K) m_{basic} [kg]	Additional mass of SDA(K) per 100mm stroke m_{add} [kg]	Basic mass SDA(K)-R $m_{basic-R}$ [kg]	Additional mass of SDA(K)-R per 100mm stroke m_{add-R} [kg]
SDA10-B-26x5	12,5	Tr 26x5	5	27,6	-	0,6	35,3	3	0,4	8	1,7
SDA25-B-30x6	25	Tr 30x6	6	46,8	-	0,8	36,3	7	0,5	19	2,6
SDA50-B-40x7	50	Tr 40x7	7	49,5	91,5	1,5	33,2	14	0,8	35	5
SDA50-B-50x8	50	Tr 50x8	8	49,5	91,5	1,5	31,1	14	1,3	35	5,5
SDA100-B-70x12	100	Tr 70x12	12	135	170	3,5	32,7	35	2,5	82	8,2
SDA100-B-80x14	100	Tr 80x14	14	135	170	3,5	33,2	35	3,3	82	9

Order code	Dimensions [mm]												Hole pitch				
	d_1	d_2	d_3	d_4	D	D_1	D_2	D_3	D_4	E	E_1	E_2	n [-]	t [°]	n_1 [-]	t_1 [°]	t_2 [°]
SDA10-B-26x5	12	15	3	24	62	40 h9	-	51	9	38	10	-	4	90	4	90	45
SDA25-B-30x6	17	21	6	35	80	50 h9	-	66	9	45	15	-	4	90	6	60	15
SDA50-B-40x7	25	36	6	41	95	$63^{-0,2}_{-0,3}$	63 h7	78	9	73	16	10	6	60	6	60	15
SDA50-B-50x8	25	36	6	41	100	70 h9	-	85	9	75	18	-	6	60	6	60	15
SDA100-B-70x12	45	50	6	57	170	120 h9	-	145	13,5	132	30	-	6	60	6	60	15
SDA100-B-80x14	45	50	6	57	170	120 h9	-	145	13,5	125	30	-	6	60	6	60	15

Order code	Dimensions [mm]													
	H_1	H_2	H_3	H_4	H_5	H_6	H_7	H_8	H_9	L_1	L_2	L_3	L_4	L_5
SDA10-B-26x5	195	45	70	10	75	45	15	165	13	80	16	24	12	40
SDA25-B-30x6	270	60	92,5	12	100	60	20	240	17	97	13	34	17	51
SDA50-B-40x7	320	70	107,5	15	140	95	22,5	276	21	121	15	38	19	58
SDA50-B-50x8	320	70	107,5	15	140	95	22,5	276	21	121	15	38	19	58
SDA100-B-70x12	450	100	145	25	200	130	35	380	25	163	25	52	26	101
SDA100-B-80x14	450	100	145	25	200	130	35	380	25	163	25	52	26	101

Order code	Dimensions [mm]													
	L_6	L_7	L_8	L_9	L_{10}	L_{11}	P	P_1	S	S_1	T	T_1	U	U_1
SDA10-B-26x5	15	121	136	148	36	2	25	16	20	15	12	9,5	16	M6
SDA25-B-30x6	20	140	155	173	41	3,5	40	30	30	25	23	9	20	M8
SDA50-B-40x7	22,5	190	205	227	50	3,5	45	35	35	30	25	15	25	M10
SDA50-B-50x8	22,5	192	207	229	50	3,5	45	35	35	30	25	15	25	M10
SDA100-B-70x12	35	284	299	330	90	3,5	50	40	45	40	25	15	35	M12
SDA100-B-80x14	35	277	292	323	90	3,5	50	40	45	40	25	15	35	M12

Order code	Dimensions [mm]												
	W	W_1	W_2	W_3	W_4	W_5	W_6	W_7	W_8	W_9	W_{10}	X[1)]	DIN 6885-A
SDA10-B-26x5	16	64	95	60	59,5	100	84	6,6	12	6,5	30	15	5x5x25
SDA25-B-30x6	19	95	140	90	89,5	145	125	9	15	8,6	50	15	6x6x28
SDA50-B-40x7	30	110	170	115	114	175	155	9	15	8,6	70	15	8x7x40
SDA50-B-50x8	30	110	170	115	114	175	155	9	15	8,6	70	15	8x7x40
SDA100-B-70x12	40	180	240	150	149,5	250	215	13,5	20	12,5	90	15	12x8x70
SDA100-B-80x14	40	180	240	150	149,5	250	215	13,5	20	12,5	90	15	12x8x70

1) Reserve

Dimensions SDAK10-B, SDAK25-B, SDAK50-B and SDAK100-B

Basic version with ball screw spindle

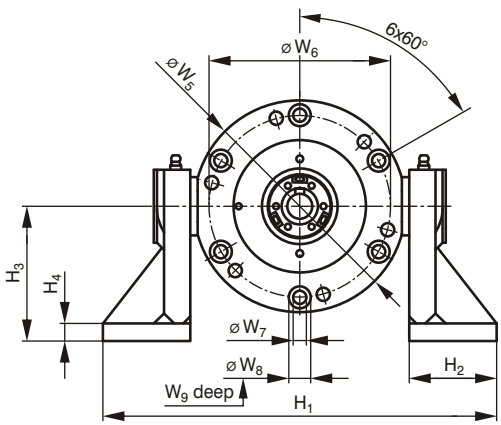

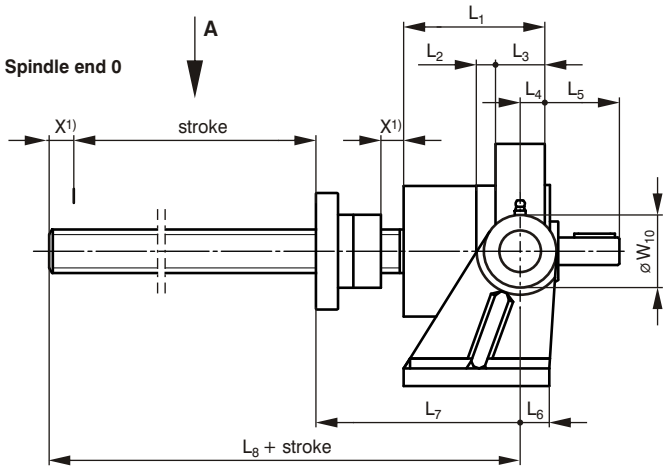

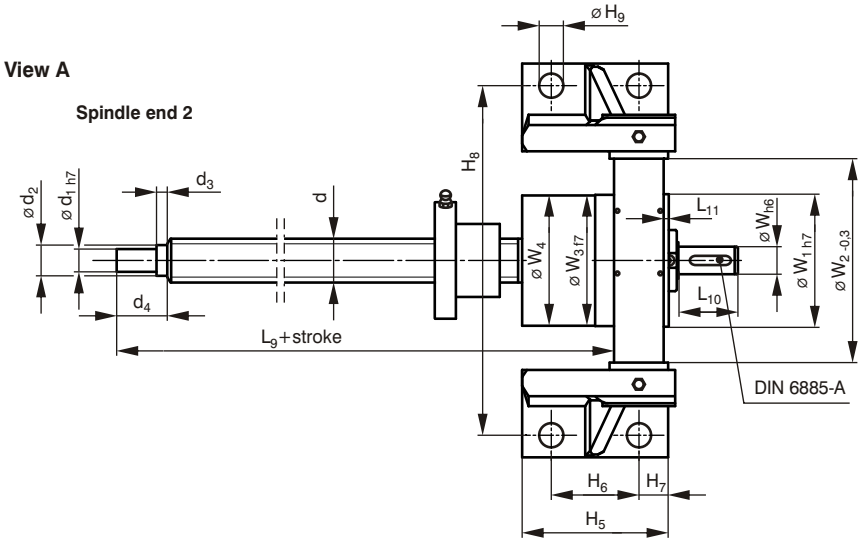

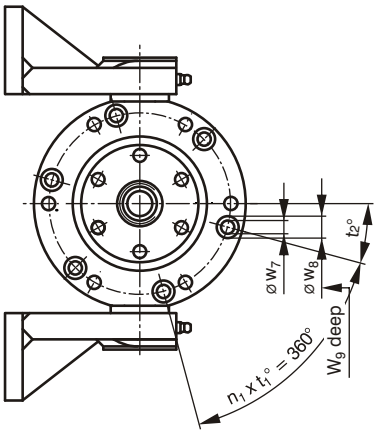

Flanged nut dimensions

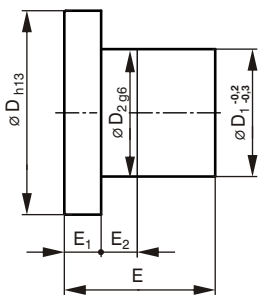

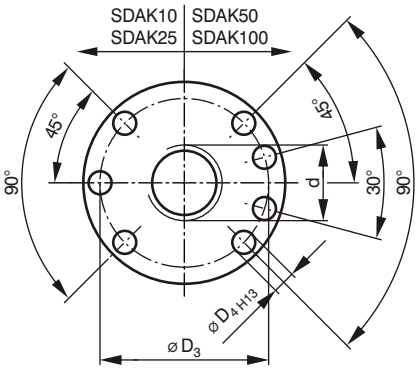

Version only with bolt ⟷ **Version only with hole**

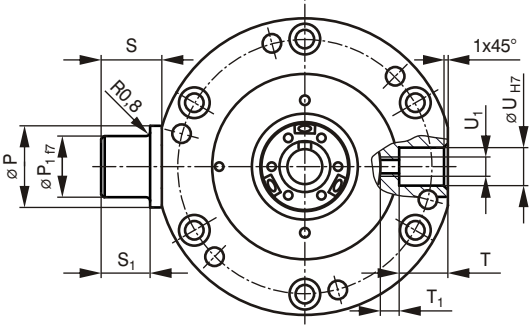

Ordering example:

- Spindle direct drive actuator with ball screw spindle
- Size
- Basic version
- Spindle
- Stroke length 300 mm
- Spindle end

SDAK50 - B - 40x20 - 300 - 2

Initial selection table

Order code	max. tensile / compressive load F_{max} [kN]	Spindle d [mm]	Lift per revolution [mm/rev.]	dyn. load rating of axial bearing $C_{dyn.}$ [kN]	increased dyn. load rating of axial bearing $C_{inc.dyn.}$ [kN]	dyn. load rating of spindle $C_{sp.}$ [kN]	max. input power at an ambient temperature of 20°C and 20% duty ED (%/h) $P_{in.}$ [kW]	Overall efficiency $\eta_{tot.}$ [%]	Basic mass SDA(K) m_{basic} [kg]	Additional mass of SDA(K) per 100mm stroke m_{add} [kg]	Basic mass SDA(K)-R $m_{basic-R}$ [kg]	Additional mass of SDA(K)-R per 100mm stroke m_{add-R} [kg]
SDAK10-B-25x5	12,5	Ku 25x5	5	27,6	-	16,87	1)	81	3	0,4	8	1,7
SDAK10-B-25x10	12,5	Ku 25x10	10	27,6	-	16,87	1)	81	3	0,4	8	1,7
SDAK25-B-32x10	25	Ku 32x10	10	46,8	-	38,00	1)	81	7	0,5	19	2,6
SDAK25-B-32x20	25	Ku 32x20	20	46,8	-	23,39	1)	81	7	0,5	19	2,6
SDAK50-B-40x10	50	Ku 40x10	10	49,5	91,5	55,02	1)	81	14	1	35	5
SDAK50-B-40x20	50	Ku 40x20	20	49,5	91,5	41,42	1)	81	14	1	35	5
SDAK100-B-63x10	100	Ku 63x10	10	135	170	78,72	1)	81	35	2,5	82	7,6
SDAK100-B-63x20	100	Ku 63x20	20	135	170	78,72	1)	81	35	2,5	82	7,6

1) see power table on page 100

Order code	Dimensions [mm]														Hole pitch		
	d_1	d_2	d_3	d_4	D	D_1	D_2	D_3	D_4	E	E_1	E_2	H_1	H_2	n_1 [-]	t_1 [°]	t_2 [°]
SDAK10-B-25x5	12	15	3	24	62	40	40	51	6,6	38	10	10	195	45	4	90	45
SDAK10-B-25x10	12	15	3	24	62	40	40	51	6,6	46	10	16	195	45	4	90	45
SDAK25-B-32x10	17	21	6	35	80	50	50	65	9	50	12	16	270	60	6	60	15
SDAK25-B-32x20	17	21	6	35	80	50	50	65	9	47	12	12	270	60	6	60	15
SDAK50-B-40x10	25	36	6	41	93	63	63	78	9	66	14	16	320	70	6	60	15
SDAK50-B-40x20	25	36	6	41	93	63	63	78	9	51	14	17	320	70	6	60	15
SDAK100-B-63x10	45	50	6	57	125	90	90	108	11	80	18	16	450	100	6	60	15
SDAK100-B-63x20	45	50	6	57	135	95	95	115	13,5	134	20	25	450	100	6	60	15

Order code	Dimensions [mm]													
	H_3	H_4	H_5	H_6	H_7	H_8	H_9	L_1	L_2	L_3	L_4	L_5	L_6	L_7
SDAK10-B-25x5	70	10	75	45	15	165	13	80	16	24	12	40	15	135
SDAK10-B-25x10	70	10	75	45	15	165	13	80	16	24	12	40	15	148
SDAK25-B-32x10	92,5	12	100	60	20	240	17	97	13	34	17	51	20	145
SDAK25-B-32x20	92,5	12	100	60	20	240	17	97	13	34	17	51	20	142
SDAK50-B-40x10	107,5	15	140	95	22,5	276	21	121	15	38	19	58	22,5	183
SDAK50-B-40x20	107,5	15	140	95	22,5	276	21	121	15	38	19	58	22,5	168
SDA100-B-63x10	145	25	200	130	35	380	25	163	25	52	26	101	35	232
SDA100-B-63x20	145	25	200	130	35	380	25	163	25	52	26	101	35	286

Order code	Dimensions [mm]												
	L_8	L_9	L_{10}	L_{11}	P	P_1	S	S_1	T	T_1	U	U_1	W
SDAK10-B-25x5	136	148	36	2	25	16	20	15	12	9,5	16	M6	16
SDAK10-B-25x10	144	156	36	2	25	16	20	15	12	9,5	16	M6	16
SDAK25-B-32x10	160	178	41	3,5	40	30	30	25	23	9	20	M8	19
SDAK25-B-32x20	157	175	41	3,5	40	30	30	25	23	9	20	M8	19
SDAK50-B-40x10	198	220	50	3,5	45	35	35	30	25	15	25	M10	30
SDAK50-B-40x20	183	205	50	3,5	45	35	35	30	25	15	25	M10	30
SDAK100-B-63x10	247	278	90	3,5	50	40	45	40	25	15	35	M12	40
SDAK100-B-63x20	301	332	90	3,5	50	40	45	40	25	15	35	M12	40

Order code	Dimensions [mm]											
	W_1	W_2	W_3	W_4	W_5	W_6	W_7	W_8	W_9	W_{10}	X1)	DIN 6885-A
SDAK10-B-25x5	64	95	60	59,5	100	84	6,6	12	6,5	30	15	5x5x25
SDAK10-B-25x10	64	95	60	59,5	100	84	6,6	12	6,5	30	15	5x5x25
SDAK25-B-32x10	95	140	90	89,5	145	125	9	15	8,6	50	15	6x6x28
SDAK25-B-32x20	95	140	90	89,5	145	125	9	15	8,6	50	15	6x6x28
SDAK50-B-40x10	110	170	115	114	175	155	9	15	8,6	70	15	8x7x40
SDAK50-B-40x20	110	170	115	114	175	155	9	15	8,6	70	15	8x7x40
SDAK100-B-63x10	180	240	150	149,5	250	215	13,5	20	12,5	90	15	12x8x70
SDAK100-B-63x20	180	240	150	149,5	250	215	13,5	20	12,5	90	15	12x8x70

1) Reserve

Dimensions SDA10-R, SDA25-R, SDA50-R and SDA100-R
SDAK10-R, SDAK25-R, SDAK50-R and SDAK100-R

Tube design

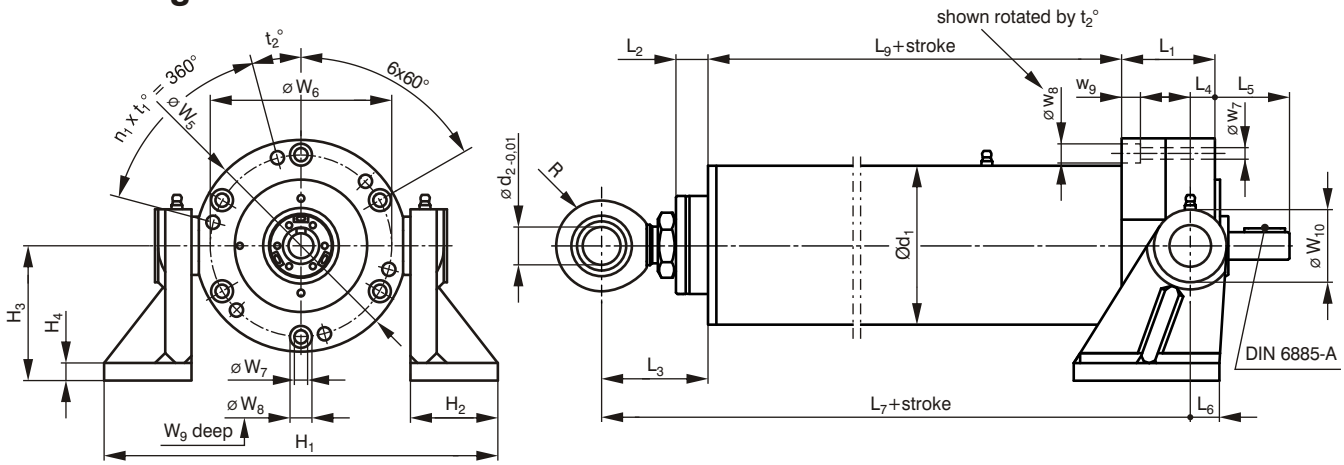

Further head designs:

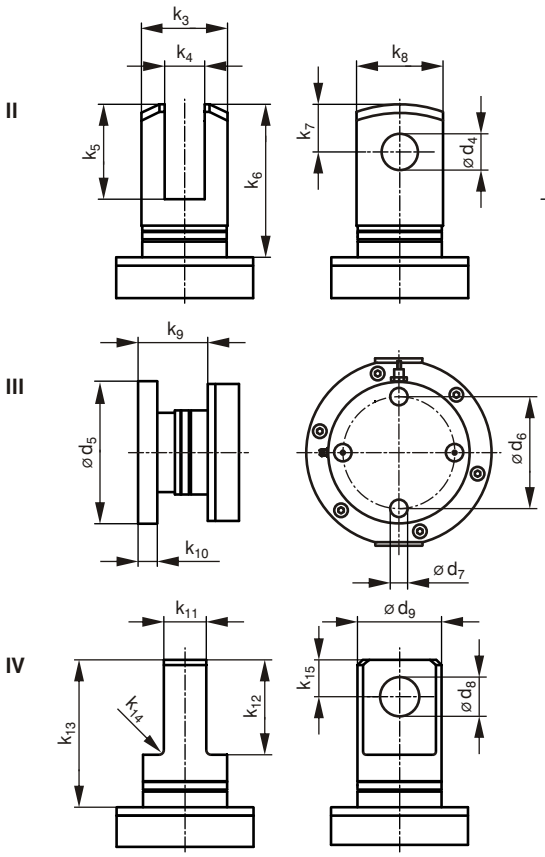

head design I

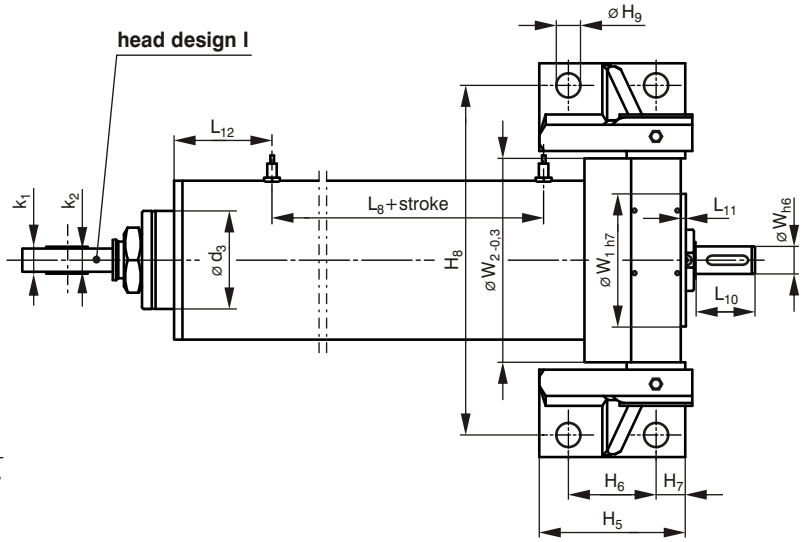

Version only with bolt ◄► **Version only with hole**

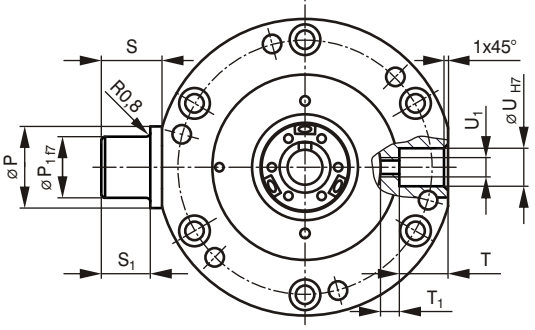

Ordering example:

- Spindle direct drive actuator with trapezoidal spindle
- Size
- Tube design
- Spindle
- Head design
- Stroke length 300 mm

SDA50 - R - 40x20 - II - 300

Order code	Dimensions [mm]																
	d_1	d_2	d_3	d_4	d_5	d_6	d_7	d_8	d_9	k_1	k_2	k_3	k_4	k_5	k_6	k_7	k_8
SDA10-R-26x5 SDAK10-R-25x5 SDAK10-R-25x10	70	20	40	20	72	54	9	20	40	13	16	42	20	50	90	30	42
SDA25-R-30x6 SDAK25-R-32x10 SDAK25-R-32x20	100	20	55	25	98	75	14	25	50	13	16	52	28	59	97	30	52
SDA50-R-40x7 SDA50-R-50x8 SDAK50-R-40x10 SDAK50-R-40x20	130	30	80	35	135	106	17	35	80	19	22	82	38	90	145	45	82
SDA100-R-70x12 SDA100-R-80x14 SDAK100-R-63x10 SDAK100-R-63x20	165	50	110	60	182	135	26	60	110	30	35	115	55	140	202	75	115

Order code	Dimensions [mm]																	Hole pitch		
	k_9	k_{10}	k_{11}	k_{12}	k_{13}	k_{14}	k_{15}	H_1	H_2	H_3	H_4	H_5	H_6	H_7	H_8	H_9	L_1	n_1 [-]	t_1 [°]	t_2 [°]
SDA10-R-26x5 SDAK10-R-25x5 SDAK10-R-25x10	57	10	25	40	80	R5	20	195	45	70	10	75	45	15	165	13	42	4	90	45
SDA25-R-30x6 SDAK25-R-32x10 SDAK25-R-32x20	50	12	30	60	92	R5	25	270	60	92,5	12	100	60	20	240	17	69	6	60	15
SDA50-R-40x7 SDA50-R-50x8 SDAK50-R-40x10 SDAK50-R-40x20	65	18	40	90	140	R5	35	320	70	107,5	15	140	95	22,5	276	21	75	6	60	15
SDA100-R-70x12 SDA100-R-80x14 SDAK100-R-63x10 SDAK100-R-63x20	92	25	75	120	177	R8	60	450	100	145	25	200	130	35	380	25	109	6	60	15

Order code	Dimensions [mm]																
	L_2	L_3	L_4	L_5	L_6	L_7	L_8	L_9	L_{10}	L_{11}	L_{12}	P	P_1	R	S	S_1	T
SDA10-R-26x5 SDAK10-R-25x5 SDAK10-R-25x10	20	65	12	40	15	297 307 316	64 74 83	202 212 221	36	2	85	25	16	26,5	20	15	12
SDA25-R-30x6 SDAK25-R-32x10 SDAK25-R-32x20	17	61	17	51	20	354	81	241	41	3,5	117	40	30	26,5	30	25	23
SDA50-R-40x7 SDA50-R-50x8 SDAK50-R-40x10 SDAK50-R-40x20	25	86	19	58	22,5	417	104	275	50	3,5	111	45	35	36,5	35	30	25
SDA100-R-70x12 SDA100-R-80x14 SDAK100-R-63x10 SDAK100-R-63x20	27	130	26	101	35	542 542 542 599	140 140 140 197	329 329 329 386	90	3,5	115	50	40	56	45	40	25

Order code	Dimensions [mm]													
	T_1	U	U_1	W	W_1	W_2	W_5	W_6	W_7	W_8	W_9	W_{10}	DIN 6885-A	lifting reserve
SDA10-R-26x5 SDAK10-R-25x5 SDAK10-R-25x10	9,5	16	M6	16	64	95	100	84	6,6	12	6,5	30	5x5x25	±15
SDA25-R-30x6 SDAK25-R-32x10 SDAK25-R-32x20	9	20	M8	19	95	140	145	125	9	15	8,6	50	6x6x28	±15
SDA50-R-40x7 SDA50-R-50x8 SDAK50-R-40x10 SDAK50-R-40x20	15	25	M10	30	110	170	175	155	9	15	8,6	70	8x7x40	±15
SDA100-R-70x12 SDA100-R-80x14 SDAK100-R-63x10 SDAK100-R-63x20	15	35	M12	40	180	240	250	215	13,5	20	12,5	90	12x8x70	±15

Dimensions

SDA Motor adaptor

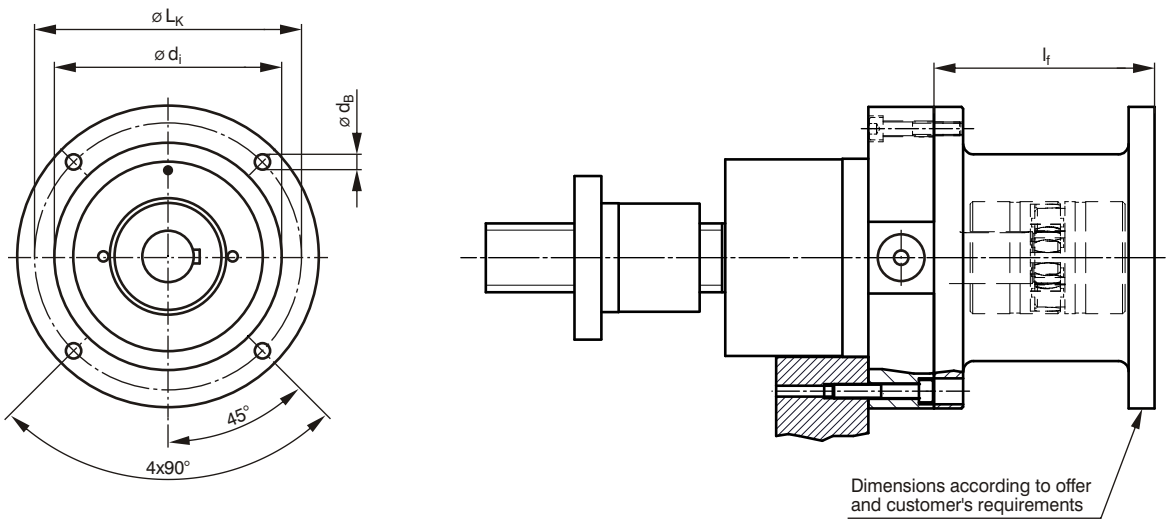

Mounting flange

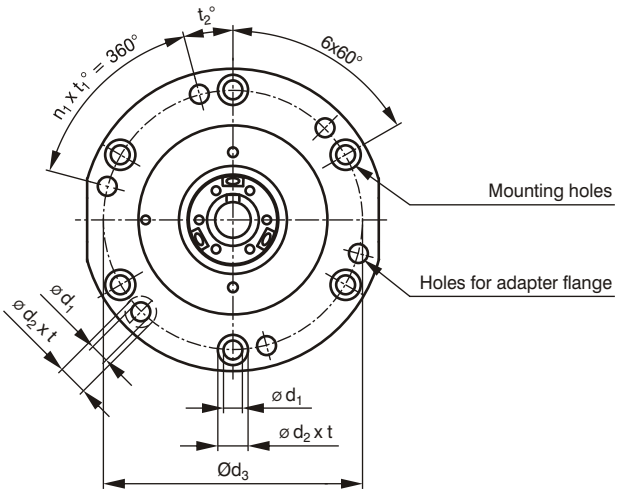

Ordering example:

Spindle direct drive actuator
Size
Motor adaptor

SDA50 - MGA

Order code	Dimensions [mm]								Hole pitch		
	d_1	d_2	d_3	t	d_i	d_B	l_f	L_K	n_1 [-]	t_1 [°]	t_2 [°]
SDA10-MGA	6,6	12	84	6,5	1)	1)	1)	1)	4	90	45
SDA25-MGA	9	15	125	8,6	1)	1)	1)	1)	6	60	15
SDA50-MGA	9	15	155	8,6	1)	1)	1)	1)	6	60	15
SDA100-MGA	13,5	20	215	12,5	1)	1)	1)	1)	6	60	15

1) Flange dimensions depend on motor specification

Technical information

Lifting reserve

Depending upon linear speed, lead of spindle and method of motor control it may be necessary to increase the stroke reserve with the actuator. In this case the additional spindle length will need to be added to the required stroke length. For applications with stroke limit switches, please indicate the required stroke length.

Protective measures

Where contamination from dirt, dust or other abrasive materials may be a factor, the following solutions are available:
- Addition of folding bellows
- For ball screw spindle - ball nut with scraper

These measures result in an extension of the ALBERT SDA spindle direct drive actuator.

Please contact our engineers.

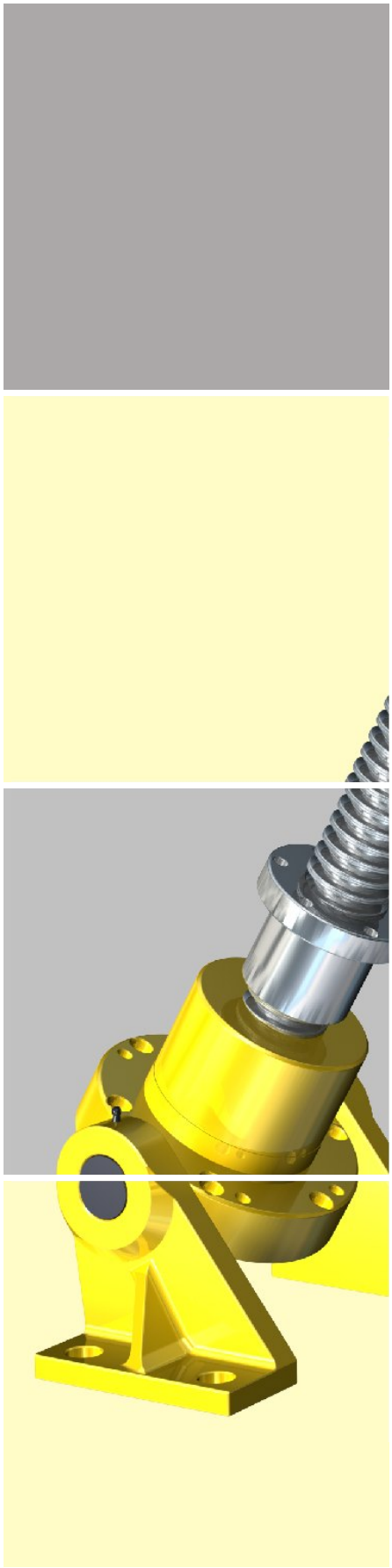

Calculations

Input power $P_{in.}$ [kW]

The input power $P_{in.}$ [kW] for the SDA spindle direct drive actuator is calculated as follows:

$$P_{in.}\ [kW] = \frac{F_{dyn.}\ [kN] \cdot V_{lift}\ [m/min]}{60 \cdot \eta}$$

Life calculation L_h [h] ball screw spindle / ball bearing

The life L_h [h] for the ball screw spindle or bearing is calculated as follows:

$$L_h\ [h] = \frac{\left(\frac{C_{dyn.}\ [kN]}{F_{dyn.}\ [kN]}\right)^3 \cdot 10^6}{60 \cdot n_{in.}\ [1/min]}$$

Explanation:

$P_{in.}$	[kW]	input power
$F_{dyn.}$	[kN]	lifting force
V_{lift}	[m/min]	lifting speed
η	[-]	total working efficiency
L_h	[h]	life
$C_{dyn.}$	[kN]	dyn. load rating
$n_{in.}$	[1/min]	input speed

Power tables for size 10

Input power - torque

Input power $P_{in.}$ [kW]
Permitted input torque to shaft $M_{in.}$ [Nm]

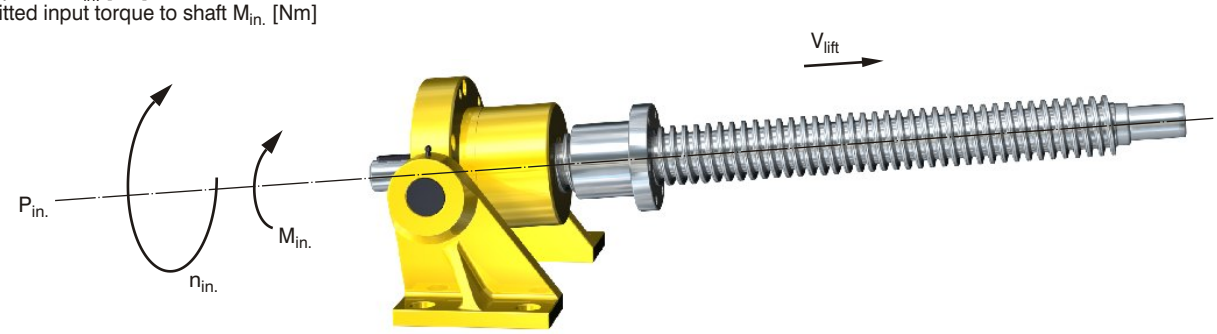

SDA10-B / SDA10-R with Tr 26x5

SDA10-B / SDA10-R		Input speed $n_{in.}$ [1/min]											
		50		100		200		300		500		700	
		Lifting speed V_{lift} [m/min]											
Tr 26 x 5		0,25		0,5		1		1,5		2,5		3,5	
		Dynamic load [kN]											
		$M_{in.}$ [Nm]	$P_{in.}$ [kW]	$M_{in.}$ [Nm]	$P_{in.}$ [kW]	$M_{in.}$ [Nm]	$P_{in.}$ [kW]	$M_{in.}$ [Nm]	$P_{in.}$ [kW]	$M_{in.}$ [Nm]	$P_{in.}$ [kW]	$M_{in.}$ [Nm]	$P_{in.}$ [kW]
Tr 26 x 5	2,5kN	5,63	0,03	5,63	0,06	5,63	0,12	5,63	0,18	5,63	0,29	5,63	0,41
Tr 26 x 5	5kN	11,26	0,06	11,26	0,12	11,26	0,24	11,26	0,35	11,26	0,59	11,26 [3]	0,83 [3]
Tr 26 x 5	7,5kN	16,89	0,09	16,89	0,18	16,89	0,35	16,89	0,53	16,89 [3]	0,88 [3]	16,89 [3]	1,24 [3]
Tr 26 x 5	10kN	22,52	0,12	22,52	0,24	22,52	0,47	22,52 [3]	0,71 [3]	22,52 [3]	1,18 [3]	22,52 [3]	1,65 [3]
Tr 26 x 5	12,5kN	28,14	0,15	28,14	0,29	28,14	0,59	28,14 [3]	0,88 [3]	28,14 [1][3]	1,47 [1][3]	28,14 [1][3]	2,06 [1][3]

[1] L_h < 500h of the axial bearing
[3] pxv value of the Tr spindle exceeded

SDAK10-B / SDAK10-R with Ku 25x5 / Ku 25x10

SDAK25-B / SDAK25-R		Input speed $n_{in.}$ [1/min]											
		50		100		200		300		500		700	
		Lifting speed V_{lift} [m/min]											
Ku 25x5		0,25		0,5		1		1,5		2,5		3,5	
Ku 25x10		0,5		1		2		3		5		7	
		Dynamic load [kN]											
		$M_{in.}$ [Nm]	$P_{in.}$ [kW]	$M_{in.}$ [Nm]	$P_{in.}$ [kW]	$M_{in.}$ [Nm]	$P_{in.}$ [kW]	$M_{in.}$ [Nm]	$P_{in.}$ [kW]	$M_{in.}$ [Nm]	$P_{in.}$ [kW]	$M_{in.}$ [Nm]	$P_{in.}$ [kW]
Ku 25x5	2,5kN	2,46	0,01	2,46	0,03	2,46	0,05	2,46	0,08	2,46	0,13	2,46	0,18
Ku 25x10	2,5kN	4,91	0,03	4,91	0,05	4,91	0,10	4,91	0,15	4,91	0,26	4,91	0,36
Ku 25x5	5kN	4,91	0,03	4,91	0,05	4,91	0,10	4,91	0,15	4,91	0,26	4,91	0,36
Ku 25x10	5kN	9,82	0,05	9,82	0,10	9,82	0,21	9,82	0,31	9,82	0,51	9,82	0,72
Ku 25x5	7,5kN	7,37	0,04	7,37	0,08	7,37	0,15	7,37	0,23	7,37 [2]	0,39 [2]	7,37 [2]	0,54 [2]
Ku 25x10	7,5kN	14,74	0,08	14,74	0,15	14,74	0,31	14,74	0,46	14,74 [2]	0,77 [2]	14,74 [2]	1,08 [2]
Ku 25x5	10kN	9,82	0,05	9,82	0,10	9,82 [2]	0,21 [2]	9,82 [2]	0,31 [2]	9,82 [2]	0,51 [2]	9,82 [2]	0,72 [2]
Ku 25x10	10kN	19,65	0,10	19,65	0,21	19,65 [2]	0,41 [2]	19,65 [2]	0,62 [2]	19,65 [2]	1,03 [2]	19,65 [2]	1,44 [2]
Ku 25x5	12,5kN	12,28	0,06	12,28 [2]	0,13 [2]	12,28 [2]	0,26 [2]	12,28 [2]	0,39 [2]	12,28 [1][2]	0,64 [1][2]	12,28 [1][2]	0,90 [1][2]
Ku 25x10	12,5kN	24,56	0,13	24,56 [2]	0,26 [2]	24,56 [2]	0,51 [2]	24,56 [2]	0,77 [2]	24,56 [1][2]	1,29 [1][2]	24,56 [1][2]	1,80 [1][2]

[1] L_h < 500h of the axial bearing
[2] L_h < 500h of the Ku spindle

Power tables for size 25

Input power - torque

Input power $P_{in.}$ [kW]
Permitted input torque to shaft $M_{in.}$ [Nm]

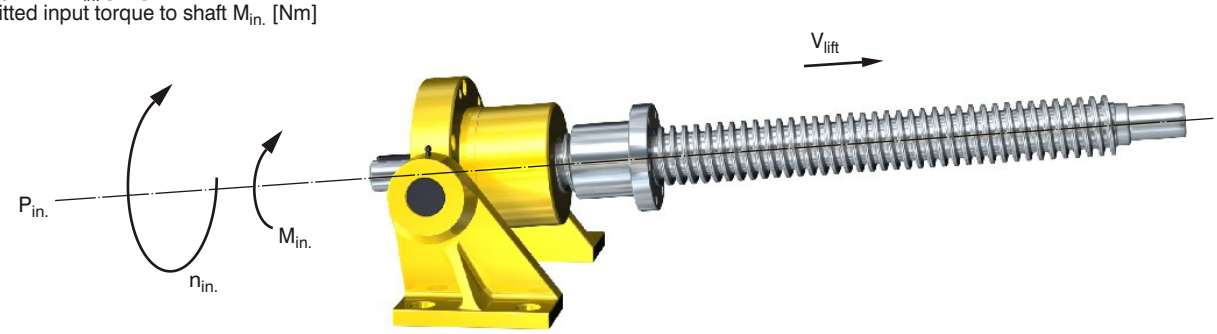

SDA25-B / SDA25-R with Tr 30x6

SDA25-B / SDA25-R		Input speed $n_{in.}$ [1/min]											
		50		100		200		300		500		700	
		Lifting speed V_{lift} [m/min]											
Tr 30 x 6		0,3		0,6		1,2		1,8		3		4,2	
		Dynamic load [kN]											
		$M_{in.}$ [Nm]	$P_{in.}$ [kW]	$M_{in.}$ [Nm]	$P_{in.}$ [kW]	$M_{in.}$ [Nm]	$P_{in.}$ [kW]	$M_{in.}$ [Nm]	$P_{in.}$ [kW]	$M_{in.}$ [Nm]	$P_{in.}$ [kW]	$M_{in.}$ [Nm]	$P_{in.}$ [kW]
Tr 30 x 6	5kN	13,17	0,07	13,17	0,14	13,17	0,28	13,17	0,41	13,17	0,69	13,17 3)	0,97 3)
Tr 30 x 6	10kN	26,33	0,14	26,33	0,28	26,33	0,55	26,33	0,83	26,33 3)	1,38 3)	26,33 3)	1,93 3)
Tr 30 x 6	15kN	39,50	0,21	39,50	0,41	39,50	0,83	39,50 3)	1,24 3)	39,50 3)	2,07 3)	39,50 3)	2,90 3)
Tr 30 x 6	20kN	52,66	0,28	52,66	0,55	52,66 3)	1,10 3)	52,66 3)	1,65 3)	52,66 1)3)	2,76 1)3)	52,66 1)3)	3,86 1)3)
Tr 30 x 6	25kN	65,83	0,34	65,83	0,69	65,83 3)	1,38 3)	65,83 1)3)	2,07 1)3)	65,83 1)3)	3,45 1)3)	65,83 1)3)	4,83 1)3)

1) L_h < 500h of the axial bearing
3) pxv value of the Tr spindle exceeded

SDAK25-B / SDAK25-R with Ku 32x10 / Ku 32x20

SDAK25-B / SDAK25-R		Input speed $n_{in.}$ [1/min]											
		50		100		200		300		500		700	
		Lifting speed V_{lift} [m/min]											
Ku 32x10		0,5		1		2		3		5		7	
Ku 32x20		1		2		4		6		10		14	
		Dynamic load [kN]											
		$M_{in.}$ [Nm]	$P_{in.}$ [kW]	$M_{in.}$ [Nm]	$P_{in.}$ [kW]	$M_{in.}$ [Nm]	$P_{in.}$ [kW]	$M_{in.}$ [Nm]	$P_{in.}$ [kW]	$M_{in.}$ [Nm]	$P_{in.}$ [kW]	$M_{in.}$ [Nm]	$P_{in.}$ [kW]
Ku 32x10	5kN	9,44	0,05	9,44	0,10	9,44	0,20	9,44	0,30	9,44	0,49	9,44	0,69
Ku 32x20	5kN	19,64	0,10	19,64	0,21	19,64	0,41	19,64	0,62	19,64	1,03	19,64	1,44
Ku 32x10	10kN	18,88	0,10	18,88	0,20	18,88	0,40	18,88	0,59	18,88	0,99	18,88	1,38
Ku 32x20	10kN	39,29	0,21	39,29	0,41	39,29	0,82	39,29	1,23	39,29 2)	2,06 2)	39,29 2)	2,88 2)
Ku 32x10	15kN	28,32	0,15	28,32	0,30	28,32	0,59	28,32	0,89	28,32	1,48	28,32	2,08
Ku 32x20	15kN	58,93	0,31	58,93	0,62	58,93 2)	1,23 2)	58,93 2)	1,85 2)	58,93 2)	3,09 2)	58,93 2)	4,32 2)
Ku 32x10	20kN	37,76	0,20	37,76	0,40	37,76	0,79	37,76	1,19	37,76 1)	1,98 1)	37,76 1)	2,77 1)
Ku 32x20	20kN	78,57	0,41	78,57 2)	0,82 2)	78,57 2)	1,65 2)	78,57 2)	2,47 2)	78,57 2)	4,11 2)	78,57 2)	5,76 2)
Ku 32x10	25kN	47,20	0,25	47,20	0,49	47,20	0,99	47,20 1)	1,48 1)	47,20 1)	2,47 1)	47,20 1)	3,46 1)
Ku 32x20	25kN	98,21 2)	0,51 2)	98,21 2)	1,03 2)	98,21 2)	2,06 2)	98,21 2)	3,09 2)	98,21 2)	5,14 2)	98,21 2)	7,20 2)

1) L_h < 500h of the axial bearing
2) L_h < 500h of the Ku spindle

Power tables for size 50

Input power - torque

Input power $P_{in.}$ [kW]
Permitted input torque to shaft $M_{in.}$ [Nm]

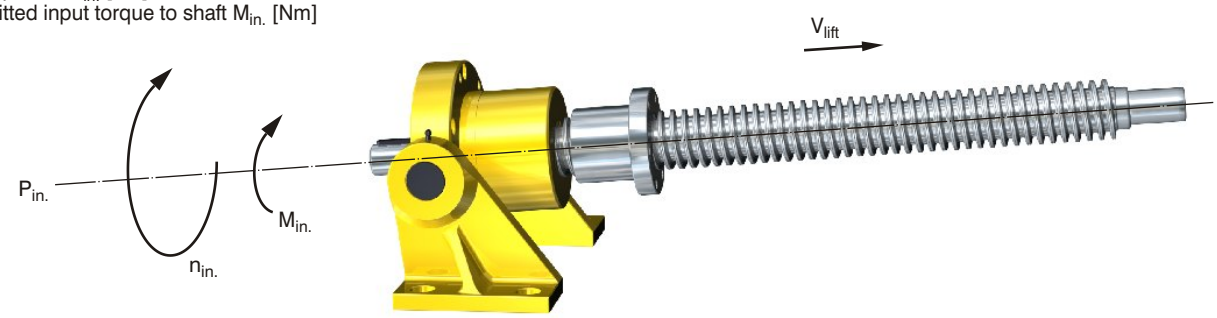

SDA50-B / SDA50-R with Tr 40x7 / Tr 50x8

SDA50-B / SDA50-R		Input speed $n_{in.}$ [1/min]											
		50		100		200		300		400		500	
		Lifting speed V_{lift} [m/min]											
Tr 40 x 7		0,35		0,7		1,4		2,1		2,8		3,5	
Tr 50 x 8		0,4		0,8		1,6		2,4		3,2		4	
		Dynamic load [kN]											
		$M_{in.}$ [Nm]	$P_{in.}$ [kW]	$M_{in.}$ [Nm]	$P_{in.}$ [kW]	$M_{in.}$ [Nm]	$P_{in.}$ [kW]	$M_{in.}$ [Nm]	$P_{in.}$ [kW]	$M_{in.}$ [Nm]	$P_{in.}$ [kW]	$M_{in.}$ [Nm]	$P_{in.}$ [kW]
Tr 40 x 7	10kN	33,58	0,18	33,58	0,35	33,58	0,70	33,58	1,06	33,58	1,41	33,58	1,76
Tr 50 x 8	10kN	40,84	0,21	40,84	0,43	40,84	0,86	40,84	1,28	40,84	1,71	40,84	2,14
Tr 40 x 7	20kN	67,16	0,35	67,16	0,70	67,16	1,41	67,16 [3]	2,11 [3]	67,16 [3]	2,81 [3]	67,16 [3]	3,52 [3]
Tr 50 x 8	20kN	81,67	0,43	81,67	0,86	81,67	1,71	81,67 [3]	2,57 [3]	81,67 [3]	3,42 [3]	81,67 [3]	4,28 [3]
Tr 40 x 7	30kN	100,75	0,53	100,75	1,06	100,75 [1]	2,11 [1]	100,75 [1][3]	3,17 [1][3]	100,75 [1][3]	4,22 [1][3]	100,75 [1][3]	5,28 [1][3]
Tr 50 x 8	30kN	122,51	0,64	122,51	1,28	122,51 [1]	2,57 [1]	122,51 [1][3]	3,85 [1][3]	122,51 [1][3]	5,13 [1][3]	122,51 [1][3]	6,41 [1][3]
Tr 40 x 7	40kN	134,33	0,70	134,33 [1]	1,41 [1]	134,33 [1]	2,81 [1]	134,33 [1][3]	4,22 [1][3]	134,33 [1][3]	5,63 [1][3]	134,33 [1][3]	7,03 [1][3]
Tr 50 x 8	40kN	163,34	0,86	163,34 [1]	1,71 [1]	163,34 [1]	3,42 [1]	163,34 [1][3]	5,13 [1][3]	163,34 [1][3]	6,84 [1][3]	163,34 [1][3]	8,55 [1][3]
Tr 40 x 7	50kN	167,91 [1]	0,88 [1]	167,91 [1]	1,76 [1]	167,91 [1]	3,52 [1]	167,91 [1][3]	5,28 [1][3]	167,91 [1][3]	7,03 [1][3]	167,91 [1][3]	8,79 [1][3]
Tr 50 x 8	50kN	204,18 [1]	1,07 [1]	204,18 [1]	2,14 [1]	204,18 [1]	4,28 [1]	204,18 [1][3]	6,41 [1][3]	204,18 [1][3]	8,55 [1][3]	204,18 [1][3]	10,69 [1][3]

[1] L_h < 500h of the axial bearing
[3] pxv value of the Tr spindle exceeded

SDAK50-B / SDAK50-R with Ku 40x10 / Ku 40x20

SDAK50-B / SDAK50-R		Input speed $n_{in.}$ [1/min]											
		50		100		200		300		400		500	
		Lifting speed V_{lift} [m/min]											
Ku 40 x 10		0,5		1		2		3		4		5	
Ku 40 x 20		1		2		4		6		8		10	
		Dynamic load [kN]											
		$M_{in.}$ [Nm]	$P_{in.}$ [kW]	$M_{in.}$ [Nm]	$P_{in.}$ [kW]	$M_{in.}$ [Nm]	$P_{in.}$ [kW]	$M_{in.}$ [Nm]	$P_{in.}$ [kW]	$M_{in.}$ [Nm]	$P_{in.}$ [kW]	$M_{in.}$ [Nm]	$P_{in.}$ [kW]
Ku 40 x 10	10kN	19,57	0,10	19,57	0,20	19,57	0,41	19,57	0,61	19,57	0,82	19,57	1,02
Ku 40 x 20	10kN	39,28	0,21	39,28	0,41	39,28	0,82	39,28	1,23	39,28	1,65	39,28	2,06
Ku 40 x 10	20kN	39,14	0,20	39,14	0,41	39,14	0,82	39,14	1,23	39,14	1,64	39,14	2,05
Ku 40 x 20	20kN	78,56	0,41	78,56	0,82	78,56	1,65	78,56 [2]	2,47 [2]	78,56 [2]	3,29 [2]	78,56 [2]	4,11 [2]
Ku 40 x 10	30kN	58,70	0,31	58,70	0,61	58,70 [1]	1,23 [1]	58,70 [1]	1,84 [1]	58,70 [1]	2,46 [1]	58,70 [1]	3,07 [1]
Ku 40 x 20	30kN	117,83	0,62	117,83 [2]	1,23 [2]	117,83 [2]	2,47 [2]	117,83 [2]	3,70 [2]	117,83 [2]	4,94 [2]	117,83 [2]	6,17 [2]
Ku 40 x 10	40kN	78,27	0,41	78,27 [1]	0,82 [1]	78,27 [1]	1,64 [1]	78,27 [1]	2,46 [1]	78,27 [1]	3,28 [1]	78,27 [1]	4,10 [1]
Ku 40 x 20	40kN	157,11 [2]	0,82 [2]	157,11 [2]	1,65 [2]	157,11 [2]	3,29 [2]	157,11 [2]	4,94 [2]	157,11 [2]	6,58 [2]	157,11 [2]	8,23 [2]
Ku 40 x 10	50kN	97,84 [1]	0,51 [1]	97,84 [1]	1,02 [1]	97,84 [1]	2,05 [1]	97,84 [1]	3,07 [1]	97,84 [1]	4,10 [1]	97,84 [1]	5,12 [1]
Ku 40 x 20	50kN	196,39 [2]	1,03 [2]	196,39 [2]	2,06 [2]	196,39 [2]	4,11 [2]	196,39 [2]	6,17 [2]	196,39 [2]	8,23 [2]	196,39 [2]	10,28 [2]

[1] L_h < 500h of the axial bearing
[2] L_h < 500h of the Ku spindle

Power tables for size 100

Input power - torque

Input power $P_{in.}$ [kW]
Permitted input torque to shaft $M_{in.}$ [Nm]

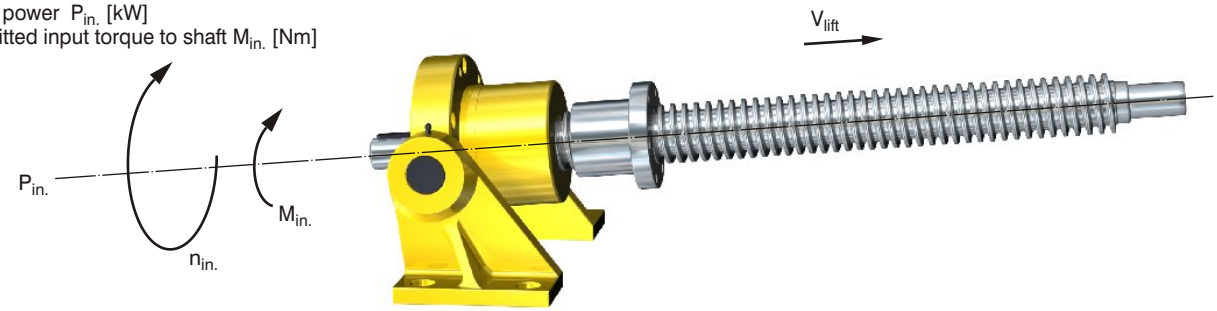

SDA100-B / SDA100-R with Tr 70x12 / Tr 80x14

SDA100-B / SDA100-R		Input speed $n_{in.}$ [1/min]											
		50		80		100		150		200		250	
		Lifting speed V_{lift} [m/min]											
Tr 70 x 12		0,6		0,96		1,2		1,8		2,4		3	
Tr 80 x 14		0,7		1,12		1,4		2,1		2,8		3,5	
		Dynamic load [kN]											
		$M_{in.}$ [Nm]	$P_{in.}$ [kW]	$M_{in.}$ [Nm]	$P_{in.}$ [kW]	$M_{in.}$ [Nm]	$P_{in.}$ [kW]	$M_{in.}$ [Nm]	$P_{in.}$ [kW]	$M_{in.}$ [Nm]	$P_{in.}$ [kW]	$M_{in.}$ [Nm]	$P_{in.}$ [kW]
Tr 70 x 12	10kN	58,39	0,31	58,39	0,49	58,39	0,61	58,39	0,92	58,39	1,22	58,39	1,53
Tr 80 x 14	10kN	67,16	0,35	67,16	0,56	67,16	0,70	67,16	1,06	67,16	1,41	67,16	1,76
Tr 70 x 12	20kN	116,77	0,61	116,77	0,98	116,77	1,22	116,77	1,83	116,77	2,45	116,77	3,06
Tr 80 x 14	20kN	134,33	0,70	134,33	1,13	134,33	1,41	134,33	2,11	134,33	2,81	134,33	3,52
Tr 70 x 12	40kN	233,55	1,22	233,55	1,96	233,55	2,45	233,55 [3]	3,67 [3]	233,55 [3]	4,89 [3]	233,55 [3]	6,11 [3]
Tr 80 x 14	40kN	268,65	1,41	268,65	2,25	268,65	2,81	268,65 [3]	4,22 [3]	268,65 [3]	5,63 [3]	268,65 [3]	7,03 [3]
Tr 70 x 12	50kN	291,94	1,53	291,94	2,45	291,94	3,06	291,94 [3]	4,59 [3]	291,94 [3]	6,11 [3]	291,94 [3]	7,64 [3]
Tr 80 x 14	50kN	335,82	1,76	335,82	2,81	335,82	3,52	335,82 [3]	5,28 [3]	335,82 [3]	7,03 [3]	335,82 [3]	8,79 [3]
Tr 70 x 12	70kN	408,71	2,14	408,71	3,42	408,71 [3]	4,28 [3]	408,71 [3]	6,42 [3]	408,71 [3]	8,56 [3]	408,71 [1)3)]	10,70 [1)3)]
Tr 80 x 14	70kN	470,14	2,46	470,14	3,94	470,14 [3]	4,92 [3]	470,14 [3]	7,39 [3]	470,14 [3]	9,85 [3]	470,14 [1)3)]	12,31 [1)3)]
Tr 70 x 12	100kN	583,87	3,06	583,87 [3]	4,89 [3]	583,87 [1)3)]	6,11 [1)3)]	583,87 [1)3)]	9,17 [1)3)]	583,87 [1)3)]	12,23 [1)3)]	583,87 [1)3)]	15,29 [1)3)]
Tr 80 x 14	100kN	671,63	3,52	671,63 [3]	5,63 [3]	671,63 [1)3)]	7,03 [1)3)]	671,63 [1)3)]	10,55 [1)3)]	671,63 [1)3)]	14,07 [1)3)]	671,63 [1)3)]	17,58 [1)3)]

[1)] L_h < 500h of the axial bearing
[3)] pxv value of the Tr spindle exceeded

SDAK100-B / SDAK100-R with Ku 63x10 / Ku 63x20

SDAK100-B / SDAK100-R		Input speed $n_{in.}$ [1/min]											
		50		80		100		150		200		250	
		Lifting speed V_{lift} [m/min]											
Ku 63 x 10		0,5		0,8		1		1,5		2		2,5	
Ku 63 x 20		1		1,6		2		3		4		5	
		Dynamic load [kN]											
		$M_{in.}$ [Nm]	$P_{in.}$ [kW]	$M_{in.}$ [Nm]	$P_{in.}$ [kW]	$M_{in.}$ [Nm]	$P_{in.}$ [kW]	$M_{in.}$ [Nm]	$P_{in.}$ [kW]	$M_{in.}$ [Nm]	$P_{in.}$ [kW]	$M_{in.}$ [Nm]	$P_{in.}$ [kW]
Ku 63 x 10	10kN	19,66	0,10	19,66	0,16	19,66	0,21	19,66	0,31	19,66	0,41	19,66	0,51
Ku 63 x 20	10kN	39,28	0,21	39,28	0,33	39,28	0,41	39,28	0,62	39,28	0,82	39,28	1,03
Ku 63 x 10	20kN	39,32	0,21	39,32	0,33	39,32	0,41	39,32	0,62	39,32	0,82	39,32	1,03
Ku 63 x 20	20kN	78,57	0,41	78,57	0,66	78,57	0,82	78,57	1,23	78,57	1,65	78,57	2,06
Ku 63 x 10	40kN	78,64	0,41	78,64	0,66	78,64	0,82	78,64	1,24	78,64	1,65	78,64	2,06
Ku 63 x 20	40kN	157,14	0,82	157,14	1,32	157,14	1,65	157,14	2,47	157,14	3,29	157,14	4,11
Ku 63 x 10	50kN	98,29	0,51	98,29	0,82	98,29	1,03	98,29 [2)]	1,54 [2)]	98,29 [2)]	2,06 [2)]	98,29 [2)]	2,57 [2)]
Ku 63 x 20	50kN	196,42	1,03	196,42	1,65	196,42	2,06	196,42 [2)]	3,09 [2)]	196,42 [2)]	4,11 [2)]	196,42 [2)]	5,14 [2)]
Ku 63 x 10	70kN	137,61	0,72	137,61	1,15	137,61 [2)]	1,44 [2)]	137,61 [2)]	2,16 [2)]	137,61 [2)]	2,88 [2)]	137,61 [1)2)]	3,60 [1)2)]
Ku 63 x 20	70kN	274,99	1,44	274,99	2,30	274,99 [2)]	2,88 [2)]	274,99 [2)]	4,32 [2)]	274,99 [2)]	5,76 [2)]	274,99 [1)2)]	7,20 [1)2)]
Ku 63 x 10	100kN	196,59 [2)]	1,03 [2)]	196,59 [2)]	1,65 [2)]	196,59 [1)2)]	2,06 [1)2)]	196,59 [1)2)]	3,09 [1)2)]	196,59 [1)2)]	4,12 [1)2)]	196,59 [1)2)]	5,15 [1)2)]
Ku 63 x 20	100kN	392,84 [2)]	2,06 [2)]	392,84 [2)]	3,29 [2)]	392,84 [1)2)]	4,11 [1)2)]	392,84 [1)2)]	6,17 [1)2)]	392,84 [1)2)]	8,23 [1)2)]	392,84 [1)2)]	10,28 [1)2)]

[1)] L_h < 500h of the axial bearing
[2)] L_h < 500h of the Ku spindle

Calculations

Critical spindle speed $n_{crit.}$ [1/min]

Rotating spindles are subject to vibration due to resonance. All rotating spindles should be checked for critical speed n_2 [1/min] vs permitted speed.

Method:

1. Determination of the spindle speed n_2 [1/min]

$$n_2\ [1/min] = \frac{V_{lift}\ [m/min] \cdot 1000}{P\ [mm]}$$

2. Obtain the critical spindle speed $n_{crit.}$ [1/min] from the graph. The spindle size and the length L_n [mm] is required.

3. Determination of the permitted spindle speed $n_{perm.}$ [1/min]:

$$n_{perm.}\ [1/min] = 0{,}8 \cdot n_{crit.}\ [1/min] \cdot f_n\ [-]$$

4. The permitted spindle speed $n_{perm.}$ [1/min] must be greater than the actual spindle speed n_2

$$n_{perm.} > n_2$$

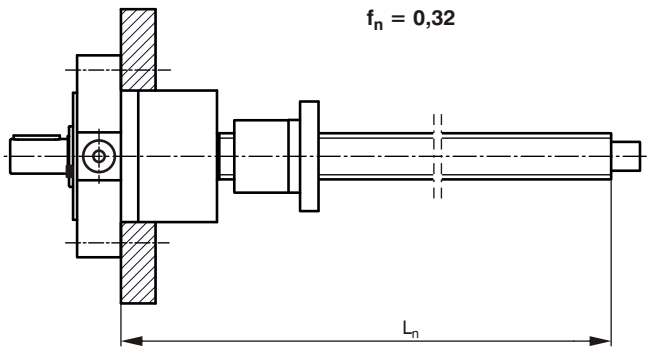

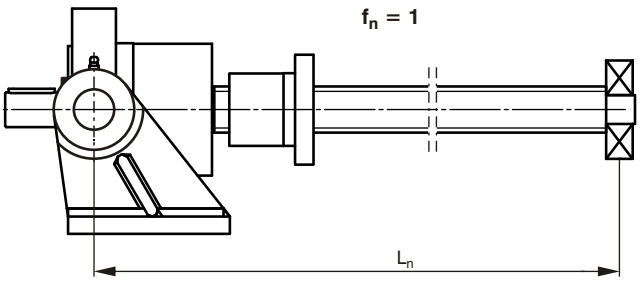

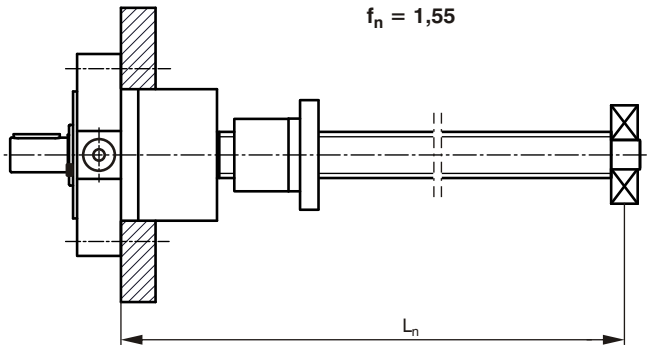

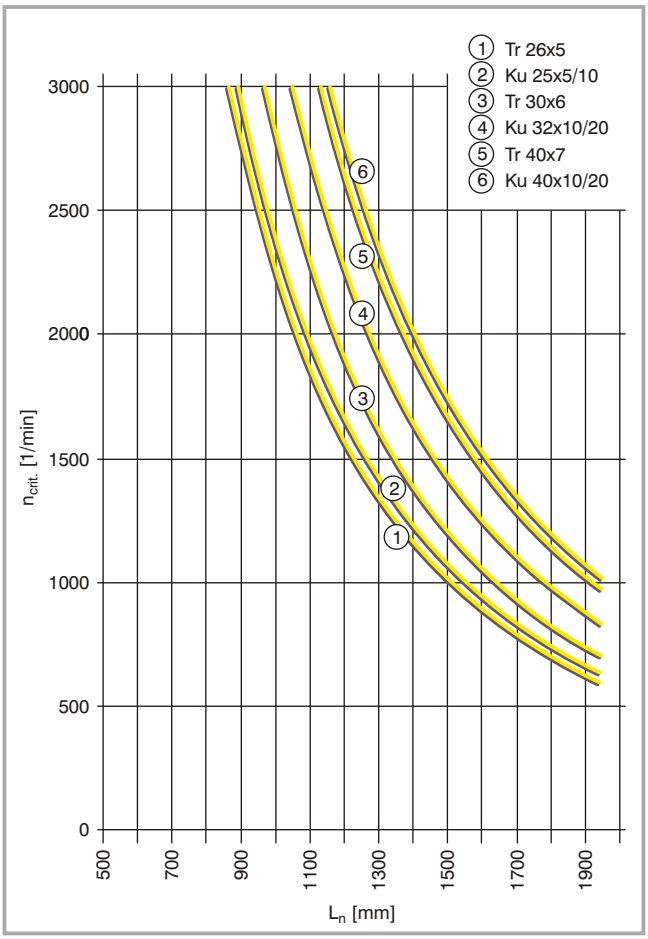

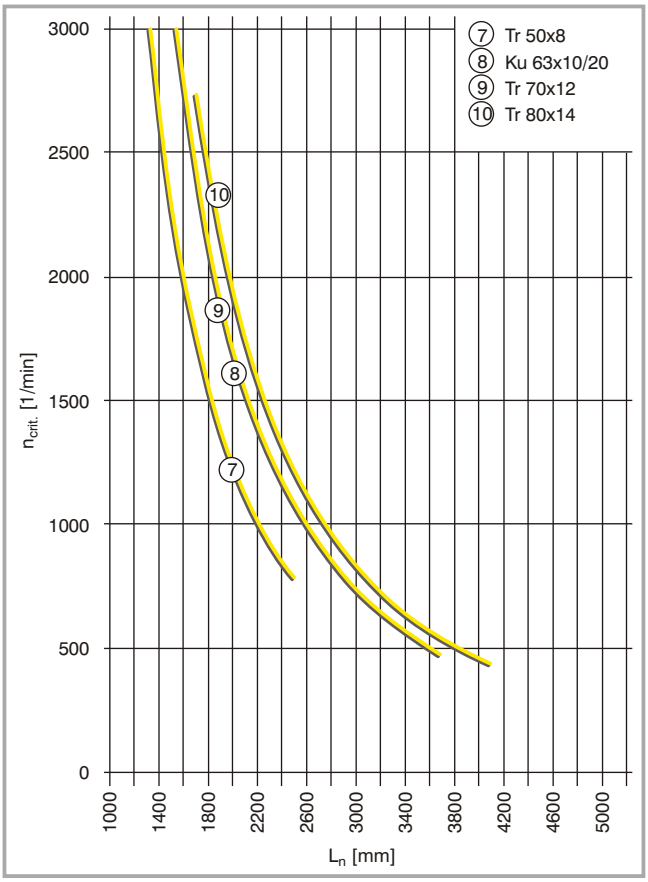

Calculations

Critical buckling loads $F_{crit.}$ [kN] on the spindle

Under compressive loading slim spindles tend to buckle. For this reason all compressively loaded spindles must be checked for permitted axial loading.

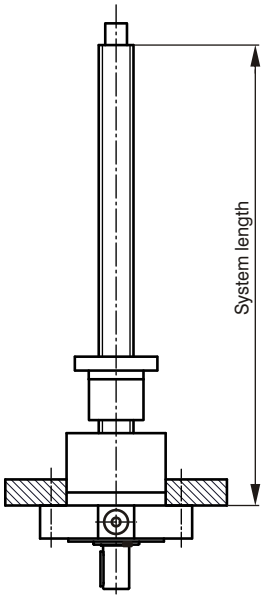

Euler case I

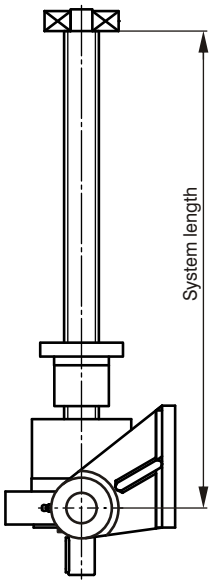

Euler case II

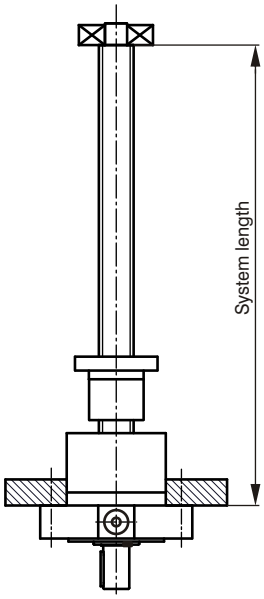

Euler case III

Euler I buckling curve

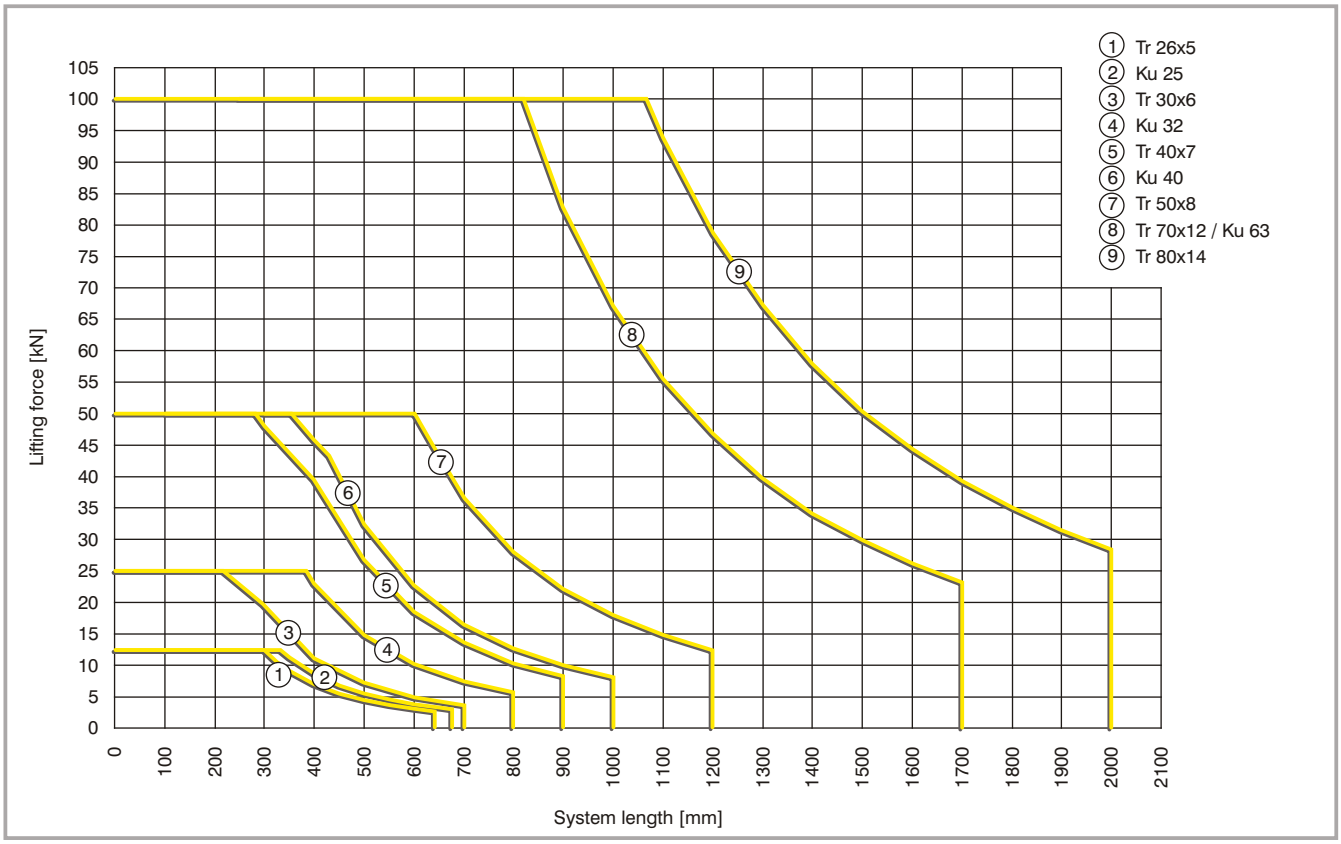

Euler II buckling curve

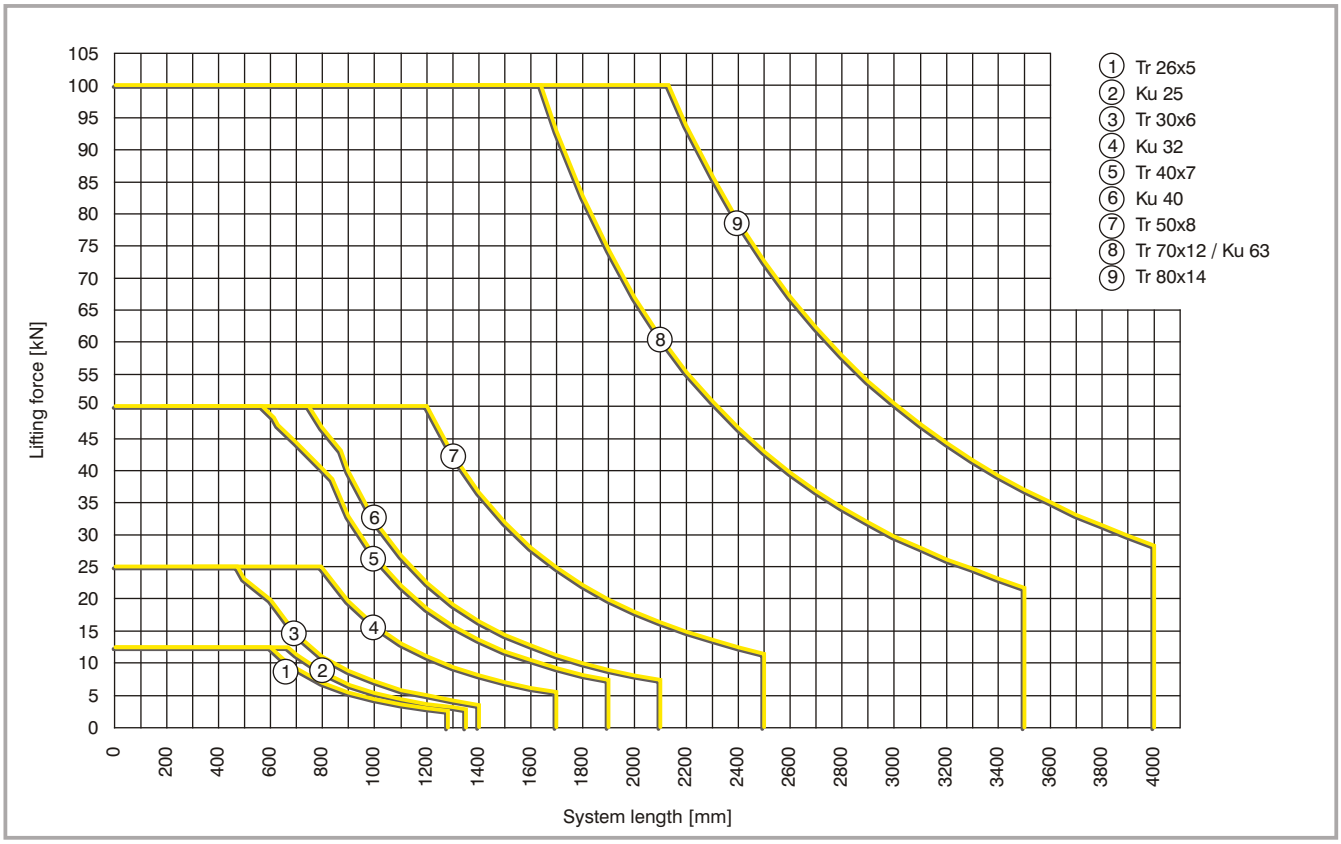
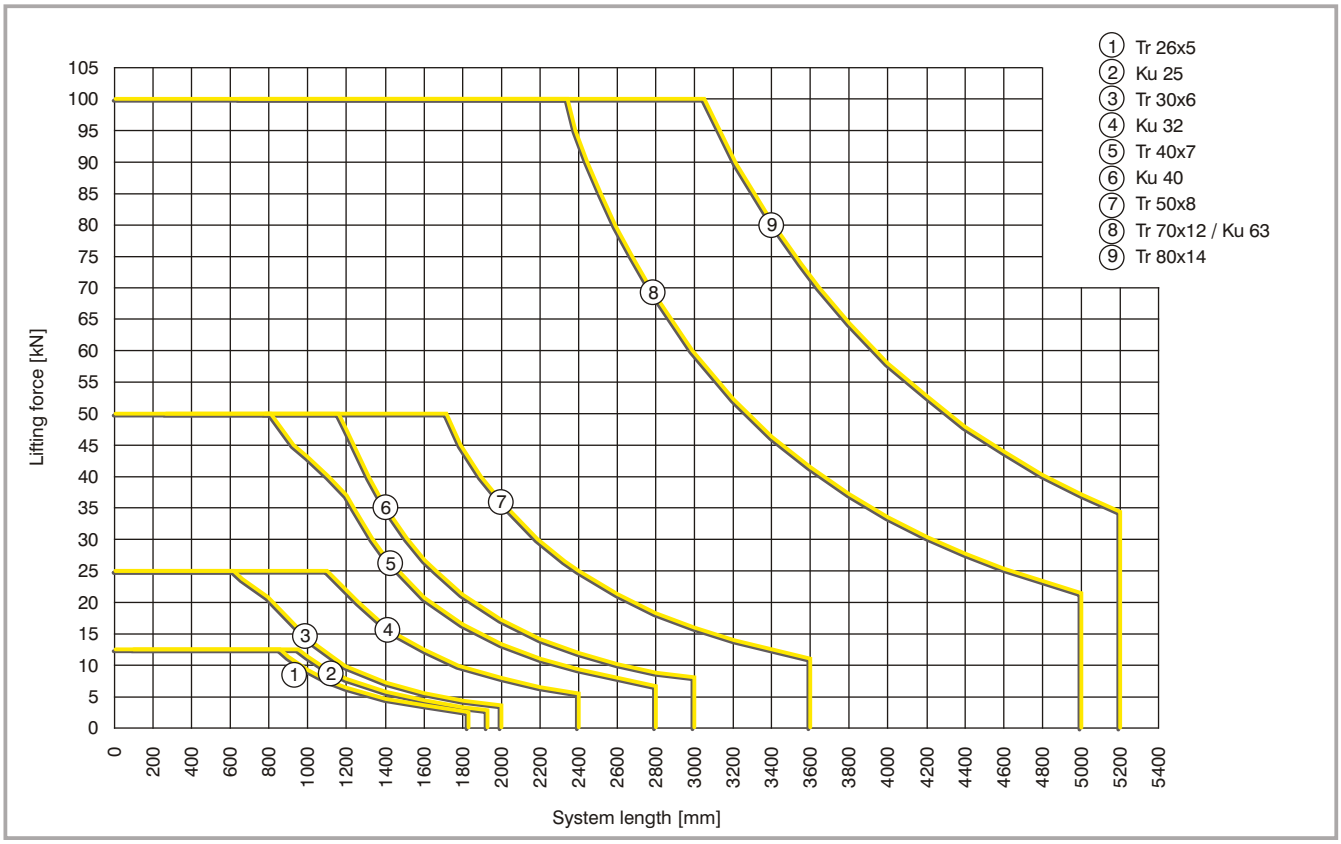
Euler III buckling curve