INKOMA - GROUP

# Friction locking bushes

INKOMA-GROUP

**INKOMA-GROUP Headoffice**
**Sitz der INKOMA Maschinenbau GmbH**
**Neue Reihe 44**
**D - 38162 Schandelah - Germany**

**phone: +49/(0)5306-9221-0**
**fax: +49/(0)5306-9221-50**
**e-mail: info@inkoma.de**
**internet: www.INKOMA-GROUP.com**

# Product description

## Inkofix - friction locking bushes ISC, ISR, ISS, ISP, ISK, ISB and ISH

INKOMA-Inkofix-friction locking bushes are non-positive couplers for the simple and problem free assembly and disassembly of machine components.
To select the correct tension unit the transmitted torque, axial load and available space must be considered.
The static and dynamic requirement as well as the drive characteristics need to be taken into account.

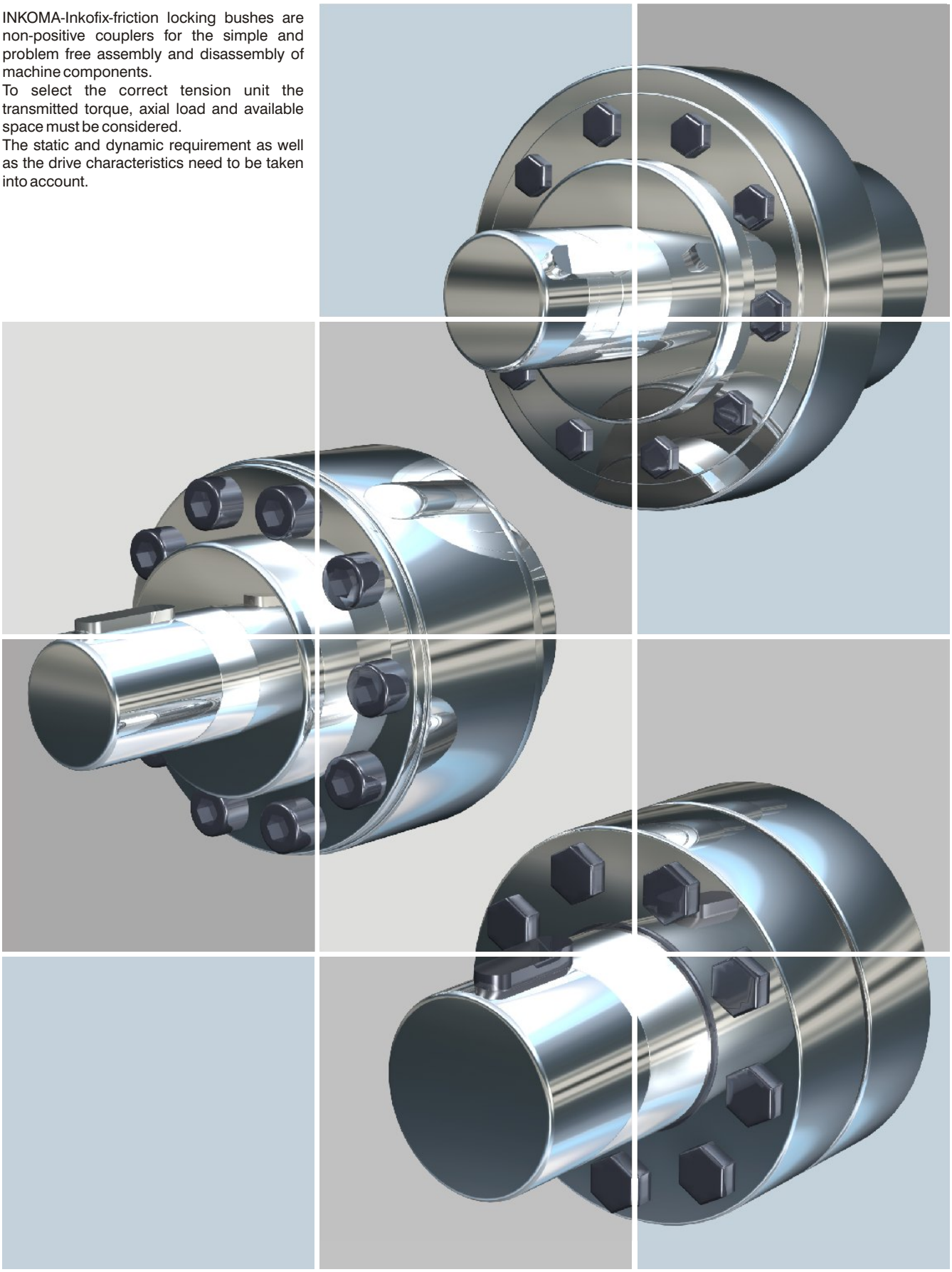

# Contents list

## Inkofix - friction locking bushes ISC, ISR, ISS, ISP, ISK, ISB and ISH

# Technical information

## Inkofix - friction locking bushes ISC, ISR, ISS, ISP, ISK, ISB and ISH

| Type of load | Load factor |
|---|---|
| Smooth loading<br>e.g. electric motor, fan, blower, centrifugal pump. | 1 |
| Minimal shock loading<br>e.g. piston compressor, internal combustion engine, mixer, machine tool, wood working machinery, spiral conveyors, as well as all applications with lightly varying loads. | 1,5 |
| Heavy shock loading<br>e.g. presses, forging, shears, conveyors, water hydraulics, milling, rolling mills. | 2 |

In the formula for selecting the friction locking bushes the following symbols are used:

**Explanation:**

| | | |
|---|---|---|
| $T_a$ | [Nm] | operational torque |
| $T$ | [Nm] | transmissible torque |
| $F_{ax\,B}$ | [kN] | operational axial loading |
| $F_{ax}$ | [kN] | max. axial load |
| $l_1$ | [mm] | effective axial length of friction locking bush |
| $L_x$ | [mm] | available fixed length of hub |
| $S_o$ | [-] | safety factor for ring thickness dependent safety |
| $D$ | [mm] | outer diameter of tension element |
| $d_W$ | [mm] | internal diameter of tension element, shafts diameter |
| $d_N$ | [mm] | outer diameter of the hub, internal diameter of tension element |
| $C_N$ | [-] | $\frac{D}{d_N}$ |
| $p_W$ | [N/mm²] | surface pressure of the shaft tension element |
| $p_N$ | [N/mm²] | permissible surface pressure in the tension element hub |
| $\sigma_R$ | [N/mm²] | radial stress |
| $\sigma_V$ | [N/mm²] | comparative stress |
| $\sigma_{N\,0,2}$ | [N/mm²] | yield point of hub material |
| $\sigma_{W\,0,2}$ | [N/mm²] | yield point for shaft material |
| $\sigma_{twi}$ | [N/mm²] | hollow shaft tangential stress |

**Calculation for the hub:**
For hubs having the form of a hollow cylinder and length $l_1$ the following formula is valid for the stress at the internal diameter:

$$\sigma_t = p_N \cdot \frac{1 + C_N^2}{1 - C_N^2}$$

$$\sigma_R = -p_N$$

Comparative stress $\sigma_V$ according to the hypothesis for strain energy of distortion:

$$\sigma_V = \frac{p_N}{1 - C_N} \cdot \sqrt{3 + C_N^4}$$

The comparative stress for hub diameter relationships $0{,}3 \leq 1$ can be estimated using the following formula:

$$\sigma_V = \frac{p_N}{0{,}8\,(1 - C_N)}$$

If torque is supplemented by an axial loading the resulting moment can be calculated as follows:

$$T \geq \sqrt{T_a^2 + \left(\frac{F_{ax\,B} \cdot d_W}{2}\right)^2} \quad [\text{Nm}]$$

Hub stress:

$$\sigma_{N\,0,2} \geq 1{,}35 \cdot p_N \cdot \frac{l_1}{L_x} \cdot \frac{1 + S_o \cdot C_N}{0{,}8\,(1 - C_N)}$$

The value $L_x$ is the available hub length for the tension element.

The catalogue values for transmission are derived by calculation. Test results as well as variations in coefficient of friction may reveal small deviations from the stated transmissible values.

# Dimensions

## ISC/K - Inkofix-friction locking bush

The INKOMA-Inkofix-friction locking bushes ISC/K are supplied in two versions (A and B).

**Version ISC/K-A:**
Higher transmissible torque than ISC/K-B. Can be easily positioned axially during assembly.

**Version ISC/K-B:**
Cannot be moved axially during assembly and transmits rather less torque than ISC/K-A.

**Tolerances:**
Greatest permitted fit:
h8 for shaft
H8 for hub

**Surface condition:**
Shaft and hub bore: Rz ≤ 16$\mu$m

**Concentricity:**
Friction locking bushes ISC/K-A and ISC/K-B are self-centering.

**Assembly:**
1. Shaft and hub should be carefully cleaned and lightly oiled. The values in the table for T and $F_{ax}$ assume assembly using oiled components.
2. Locate the friction locking bush in the hub.
3. Slide friction locking bush with hub on the shaft into position.
4. Tighten opposite tensioning screws gradually up to the recommended tightening torque $T_A$ using a torque wrench.
5. Check the tightening torque for all screws in the tightening sequence.

**Note:**
Oils containing molybdenum disulphide or high pressure additives should not be used. Do not use grease. These will radically reduce the coefficient of friction. The friction locking bushes are supplied lubricated. Oil-free assembly will achieve different values to both the tabled and calculated ones.

**Dis-assembly:**
1. Remove tension screws
2. Three or four of the screws should be inserted to the axial dismounting threads. Gradually tighten these in turn until the conical ring is released.
3. The friction locking bush and the hub can now be removed.

**Version ISC/K-A**

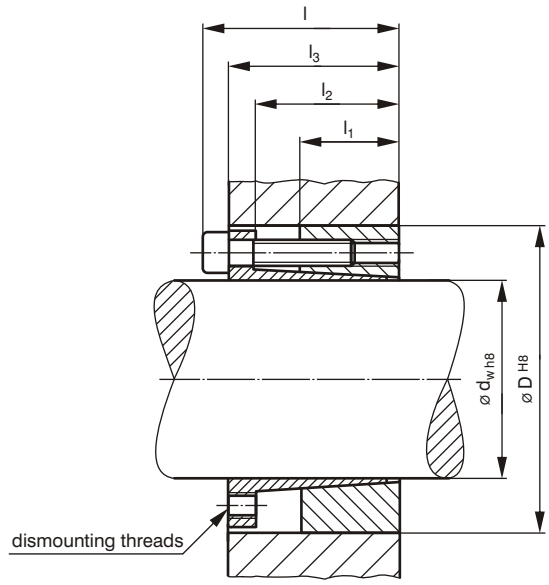


**Version ISC/K-B**

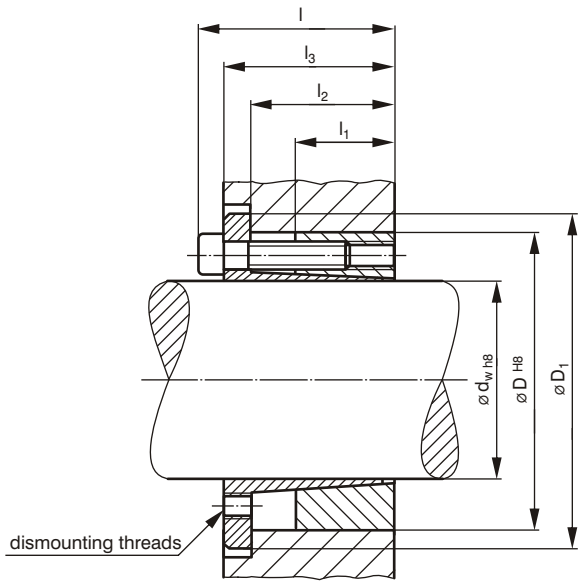


**Explanation:**

T = maximum transmissible torque for an Inkofix-friction locking bush

$F_{ax}$ = maximum axial force which may be applied to an Inkofix-friction locking bush

$T_A$ = the required tightening torque for the tensioning screws

## Ordering example:

Inkofix-friction locking bush
Shaft diameter
External diameter
Index of version

**ISC/K 50 x 80 - A**

| Order code $d_W$ x D | Dimensions [mm] $l_1$ | $l_2$ | $l_3$ | $l$ | Tension screw ISO 4762 (DIN 912) | Tightening torque $T_A$ [Nm] | Operational data Torque T [Nm] | max. axial force $F_{ax}$ [kN] | Surface pressure between friction locking bush and Shaft $p_W$ [N/mm²] | Hub $p_N$ [N/mm²] | Mass [kg] |
|---|---|---|---|---|---|---|---|---|---|---|---|
| ISC/K 20 x 47 - A | 17 | 22 | 28 | 34 | M6 | 14 | 350 | 35 | 280 | 120 | 0,26 |
| ISC/K 22 x 47 - A | 17 | 22 | 28 | 34 | M6 | 14 | 380 | 35 | 260 | 120 | 0,25 |
| ISC/K 24 x 50 - A | 17 | 22 | 28 | 34 | M6 | 14 | 420 | 35 | 240 | 110 | 0,28 |
| ISC/K 25 x 50 - A | 17 | 22 | 28 | 34 | M6 | 14 | 520 | 42 | 270 | 140 | 0,27 |
| ISC/K 28 x 55 - A | 17 | 22 | 28 | 34 | M6 | 14 | 580 | 42 | 240 | 120 | 0,32 |
| ISC/K 30 x 55 - A | 17 | 22 | 28 | 34 | M6 | 14 | 620 | 42 | 230 | 130 | 0,30 |
| ISC/K 32 x 60 - A | 17 | 22 | 28 | 34 | M6 | 14 | 890 | 55 | 280 | 150 | 0,37 |
| ISC/K 35 x 60 - A | 17 | 22 | 28 | 34 | M6 | 14 | 970 | 55 | 260 | 150 | 0,35 |
| ISC/K 38 x 65 - A | 17 | 22 | 28 | 34 | M6 | 14 | 1060 | 55 | 240 | 140 | 0,41 |
| ISC/K 40 x 65 - A | 17 | 22 | 28 | 34 | M6 | 14 | 1100 | 55 | 230 | 140 | 0,38 |
| ISC/K 45 x 75 - A | 20 | 25 | 33 | 41 | M8 | 35 | 2100 | 90 | 290 | 170 | 0,61 |
| ISC/K 50 x 80 - A | 20 | 25 | 33 | 41 | M8 | 35 | 2300 | 90 | 260 | 160 | 0,67 |

Other sizes available, please enquire.

| Order code $d_W$ x D | Dimensions [mm] $l_1$ | $l_2$ | $l_3$ | $l$ | $D_1$ | Tension screw ISO 4762 (DIN 912) | Tightening torque $T_A$ [Nm] | Operational data Torque T [Nm] | max. axial force $F_{ax}$ [kN] | Surface pressure between friction locking bush and Shaft $p_W$ [N/mm²] | Hub $p_N$ [N/mm²] | Mass [kg] |
|---|---|---|---|---|---|---|---|---|---|---|---|---|
| ISC/K 20 x 47 - B | 17 | 22 | 28 | 34 | 56 | M6 | 17 | 280 | 30 | 220 | 90 | 0,28 |
| ISC/K 22 x 47 - B | 17 | 22 | 28 | 34 | 56 | M6 | 17 | 310 | 30 | 200 | 90 | 0,27 |
| ISC/K 24 x 50 - B | 17 | 22 | 28 | 34 | 59 | M6 | 17 | 400 | 30 | 220 | 110 | 0,31 |
| ISC/K 25 x 50 - B | 17 | 22 | 28 | 34 | 59 | M6 | 17 | 440 | 30 | 210 | 110 | 0,30 |
| ISC/K 28 x 55 - B | 17 | 22 | 28 | 34 | 64 | M6 | 17 | 490 | 30 | 200 | 100 | 0,36 |
| ISC/K 30 x 55 - B | 17 | 22 | 28 | 34 | 64 | M6 | 17 | 530 | 30 | 190 | 100 | 0,35 |
| ISC/K 32 x 60 - B | 17 | 22 | 28 | 34 | 69 | M6 | 17 | 760 | 50 | 210 | 110 | 0,42 |
| ISC/K 35 x 60 - B | 17 | 22 | 28 | 34 | 69 | M6 | 17 | 820 | 50 | 190 | 110 | 0,39 |
| ISC/K 38 x 65 - B | 17 | 22 | 28 | 34 | 74 | M6 | 17 | 890 | 50 | 190 | 110 | 0,45 |
| ISC/K 40 x 65 - B | 17 | 22 | 28 | 34 | 74 | M6 | 17 | 940 | 50 | 190 | 100 | 0,45 |
| ISC/K 45 x 75 - B | 20 | 25 | 33 | 41 | 84 | M8 | 41 | 1700 | 60 | 230 | 130 | 0,70 |
| ISC/K 50 x 80 - B | 20 | 25 | 33 | 41 | 89 | M8 | 41 | 1900 | 90 | 210 | 130 | 0,76 |
| ISC/K 55 x 85 - B | 20 | 25 | 33 | 41 | 94 | M8 | 41 | 2400 | 90 | 210 | 130 | 0,85 |
| ISC/K 60 x 90 - B | 20 | 25 | 33 | 41 | 99 | M8 | 41 | 2700 | 90 | 190 | 120 | 0,90 |
| ISC/K 65 x 95 - B | 20 | 25 | 33 | 41 | 104 | M8 | 41 | 3200 | 90 | 200 | 130 | 0,93 |
| ISC/K 70 x 110 - B | 24 | 30 | 40 | 50 | 119 | M10 | 83 | 4900 | 120 | 220 | 140 | 1,67 |
| ISC/K 75 x 115 - B | 24 | 30 | 40 | 50 | 124 | M10 | 83 | 5200 | 120 | 200 | 130 | 1,76 |
| ISC/K 80 x 120 - B | 24 | 30 | 40 | 50 | 129 | M10 | 83 | 5500 | 120 | 190 | 120 | 1,87 |
| ISC/K 85 x 125 - B | 24 | 30 | 40 | 50 | 134 | M10 | 83 | 6600 | 130 | 200 | 130 | 1,96 |
| ISC/K 90 x 130 - B | 24 | 30 | 40 | 50 | 139 | M10 | 83 | 7000 | 130 | 190 | 130 | 2,05 |
| ISC/K 95 x 135 - B | 24 | 30 | 40 | 50 | 144 | M10 | 83 | 8200 | 130 | 200 | 140 | 2,30 |
| ISC/K 100 x 145 - B | 26 | 32 | 44 | 56 | 154 | M12 | 145 | 10100 | 170 | 210 | 150 | 2,83 |
| ISC/K 110 x 155 - B | 26 | 32 | 44 | 56 | 164 | M12 | 145 | 11000 | 170 | 190 | 140 | 3,10 |
| ISC/K 120 x 165 - B | 26 | 32 | 44 | 56 | 174 | M12 | 145 | 13600 | 200 | 210 | 140 | 3,30 |
| ISC/K 130 x 180 - B | 34 | 40 | 52 | 64 | 189 | M12 | 145 | 19000 | 270 | 190 | 140 | 5,10 |
| ISC/K 140 x 190 - B | 34 | 40 | 54 | 68 | 199 | M14 | 230 | 21800 | 270 | 180 | 130 | 5,40 |
| ISC/K 150 x 200 - B | 34 | 40 | 54 | 68 | 209 | M14 | 230 | 25600 | 320 | 190 | 140 | 5,70 |

Other sizes available, please enquire.

# Dimensions

## ISC/L - Inkofix-friction locking bush

The INKOMA Inkofix-friction locking bushes ISC/L are supplied in two versions (A and B).

**Version ISC/L-A:**
Higher transmissible torque than ISC/L-B. Can be easily positioned axially during assembly.

**Version ISC/L-B:**
Cannot be moved axially during assembly and transmits rather less torque than ISC/L-A.

**Tolerances:**
Greatest permitted fit:
h8 for shaft
H8 for hub

**Surface condition:**
Shaft and hub bore: Rz ≤ 16$\mu$m

**Concentricity:**
Friction locking bushes ISC/L-A and ISC/L-B are self-centering.

**Assembly:**
1. Shaft and hub should be carefully cleaned and lightly oiled. The values in the table for T and $F_{ax}$ assume assembly using oiled components.
2. Locate the friction locking bush in the hub.
3. Slide friction locking bush with hub on the shaft into position.
4. Tighten opposite tensioning screws gradually up to the recommended tightening torque $T_A$ using a torque wrench.
5. Check the tightening torque for all screws in the tightening sequence.

**Note:**
Oils containing molybdenum disulphide or high pressure additives should not be used. Do not use grease.These will radically reduce the coefficient of friction. The friction locking bushes are supplied lubricated. Oil-free assembly will achieve different values to both the tabled and calculated ones.

**Dis-assembly:**
1. Remove tension screws
2. Three or four of the screws should be inserted to the axial dismounting threads. Gradually tighten these in turn until the conical ring is released.
3. The friction locking bush and the hub can now be removed.

**Version ISC/L-A**

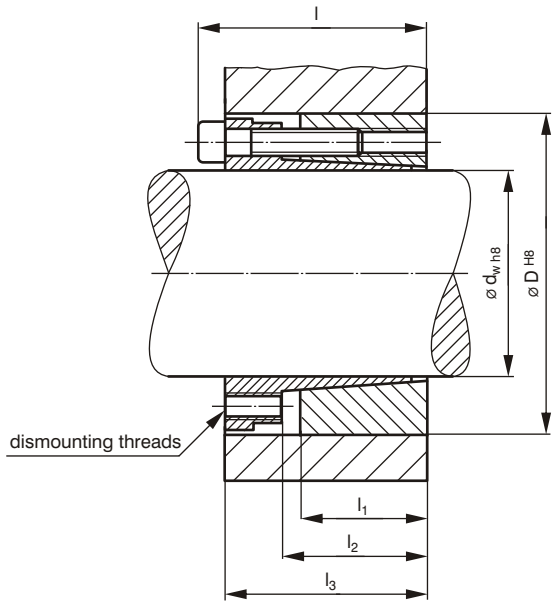


**Version ISC/L-B**

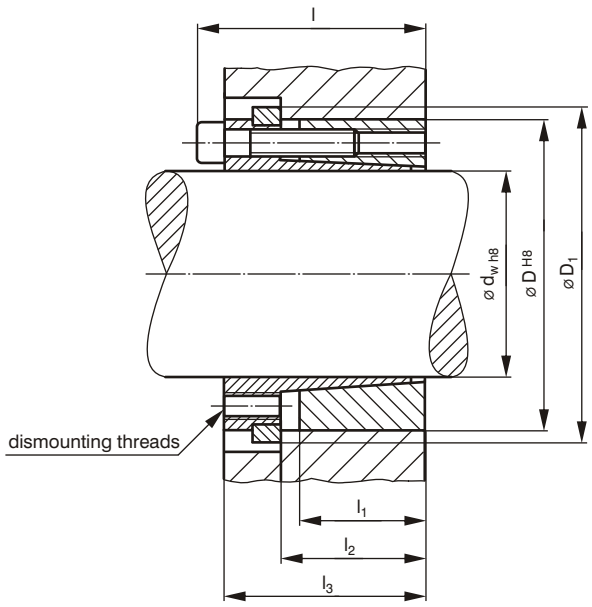


**Explanation:**

T = maximum transmissible torque for an Inkofix-friction locking bush

$F_{ax}$ = maximum axial force which may be applied to an Inkofix-friction locking bush

$T_A$ = the required tightening torque for the tensioning screws

## Ordering example:

Inkofix-friction locking bush
Shaft diameter
External diameter
Index of version

**ISC/L 30 x 55 - A**

| Order code $d_W$ x D | Dimensions [mm] | | | | | Tension screw | |
|---|---|---|---|---|---|---|---|
| | $l_1$ | $l_2$ | $l_3$ | l | $D_1$ | ISO 4762 (DIN 912) | Tightening torque $T_A$ [Nm] |
| ISC/L 20 x 47 | 26 | 31 | 39 | 45 | 56 | M6 | 17 |
| ISC/L 22 x 47 | 26 | 31 | 39 | 45 | 56 | M6 | 17 |
| ISC/L 24 x 50 | 26 | 31 | 39 | 45 | 59 | M6 | 17 |
| ISC/L 25 x 50 | 26 | 31 | 39 | 45 | 59 | M6 | 17 |
| ISC/L 28 x 55 | 26 | 31 | 39 | 45 | 64 | M6 | 17 |
| ISC/L 30 x 55 | 26 | 31 | 39 | 45 | 64 | M6 | 17 |
| ISC/L 32 x 60 | 26 | 31 | 39 | 45 | 69 | M6 | 17 |
| ISC/L 35 x 60 | 26 | 31 | 39 | 45 | 69 | M6 | 17 |
| ISC/L 38 x 65 | 26 | 31 | 39 | 45 | 74 | M6 | 17 |
| ISC/L 40 x 65 | 26 | 31 | 39 | 45 | 74 | M6 | 17 |
| ISC/L 42 x 75 | 30 | 36 | 47 | 55 | 84 | M8 | 41 |
| ISC/L 45 x 75 | 30 | 36 | 47 | 55 | 84 | M8 | 41 |
| ISC/L 48 x 80 | 30 | 36 | 47 | 55 | 89 | M8 | 41 |
| ISC/L 50 x 80 | 30 | 36 | 47 | 55 | 89 | M8 | 41 |
| ISC/L 55 x 85 | 30 | 36 | 47 | 55 | 94 | M8 | 41 |
| ISC/L 60 x 90 | 30 | 36 | 47 | 55 | 99 | M8 | 41 |
| ISC/L 65 x 95 | 30 | 36 | 47 | 55 | 104 | M8 | 41 |
| ISC/L 70 x 110 | 40 | 46 | 57 | 67 | 119 | M10 | 83 |
| ISC/L 75 x 115 | 40 | 46 | 62 | 72 | 124 | M10 | 83 |
| ISC/L 80 x 120 | 40 | 46 | 62 | 72 | 129 | M10 | 83 |
| ISC/L 85 x 125 | 40 | 46 | 62 | 72 | 134 | M10 | 83 |
| ISC/L 90 x 130 | 40 | 46 | 62 | 72 | 139 | M10 | 83 |
| ISC/L 95 x 135 | 40 | 46 | 62 | 72 | 144 | M10 | 83 |
| ISC/L 100 x 145 | 46 | 52 | 77 | 89 | 154 | M12 | 145 |
| ISC/L 110 x 155 | 46 | 52 | 77 | 89 | 164 | M12 | 145 |
| ISC/L 120 x 165 | 46 | 52 | 77 | 89 | 174 | M12 | 145 |
| ISC/L 130 x 180 | 46 | 52 | 77 | 89 | 189 | M12 | 145 |
| ISC/L 140 x 190 | 51 | 59 | 84 | 98 | 199 | M14 | 230 |
| ISC/L 150 x 200 | 51 | 59 | 84 | 98 | 209 | M14 | 230 |

Other sizes available, please enquire.

| Order code $d_W$ x D | ISC/L-A | | | | | ISC/L-B | | | | |
|---|---|---|---|---|---|---|---|---|---|---|
| | Operational data | | | | Mass | Operational data | | | | Mass |
| | Torque | max. axial force | Surface pressure between friction locking bush and | | | Torque | max. axial force | Surface pressure between friction locking bush and | | |
| | | | Shaft | Hub | | | | Shaft | Hub | |
| | T [Nm] | $F_{ax}$ [kN] | $p_W$ [N/mm²] | $p_N$ [N/mm²] | [kg] | T [Nm] | $F_{ax}$ [kN] | $p_W$ [N/mm²] | $p_N$ [N/mm²] | [kg] |
| ISC/L 20 x 47 | 380 | 33 | 230 | 100 | 0,38 | 310 | 31 | 230 | 95 | 0,42 |
| ISC/L 22 x 47 | 430 | 33 | 220 | 90 | 0,37 | 360 | 31 | 210 | 95 | 0,40 |
| ISC/L 24 x 50 | 520 | 50 | 220 | 100 | 0,41 | 420 | 35 | 210 | 100 | 0,44 |
| ISC/L 25 x 50 | 580 | 50 | 230 | 100 | 0,42 | 470 | 35 | 220 | 110 | 0,43 |
| ISC/L 28 x 55 | 690 | 50 | 220 | 110 | 0,48 | 580 | 41 | 200 | 110 | 0,52 |
| ISC/L 30 x 55 | 750 | 50 | 200 | 120 | 0,46 | 640 | 41 | 220 | 120 | 0,49 |
| ISC/L 32 x 60 | 910 | 67 | 230 | 110 | 0,52 | 780 | 50 | 200 | 110 | 0,56 |
| ISC/L 35 x 60 | 1000 | 67 | 200 | 120 | 0,51 | 840 | 50 | 200 | 120 | 0,55 |
| ISC/L 38 x 65 | 1200 | 67 | 210 | 120 | 0,60 | 1000 | 50 | 200 | 120 | 0,64 |
| ISC/L 40 x 65 | 1300 | 67 | 200 | 120 | 0,57 | 1100 | 50 | 200 | 120 | 0,61 |
| ISC/L 42 x 75 | 2100 | 67 | 230 | 140 | 1,02 | 1900 | 90 | 220 | 140 | 1,09 |
| ISC/L 45 x 75 | 2300 | 92 | 230 | 140 | 0,93 | 1900 | 90 | 220 | 140 | 1,00 |
| ISC/L 48 x 80 | 2500 | 110 | 210 | 130 | 1,05 | 2100 | 90 | 220 | 140 | 1,10 |
| ISC/L 50 x 80 | 2500 | 120 | 210 | 130 | 1,01 | 2200 | 90 | 220 | 140 | 1,07 |
| ISC/L 55 x 85 | 3100 | 120 | 220 | 140 | 1,12 | 2400 | 90 | 220 | 140 | 1,20 |
| ISC/L 60 x 90 | 3300 | 120 | 200 | 150 | 1,21 | 2600 | 90 | 210 | 140 | 1,29 |
| ISC/L 65 x 95 | 4000 | 120 | 210 | 140 | 1,23 | 2800 | 90 | 200 | 130 | 1,31 |
| ISC/L 70 x 110 | 6700 | 190 | 220 | 140 | 2,30 | 5700 | 160 | 220 | 150 | 2,44 |
| ISC/L 75 x 115 | 7400 | 190 | 210 | 140 | 2,50 | 6200 | 160 | 220 | 140 | 2,60 |
| ISC/L 80 x 120 | 7900 | 190 | 200 | 130 | 2,58 | 6700 | 160 | 200 | 140 | 2,73 |
| ISC/L 85 x 125 | 9500 | 240 | 210 | 140 | 2,70 | 8000 | 180 | 220 | 160 | 2,80 |
| ISC/L 90 x 130 | 10100 | 240 | 200 | 140 | 2,80 | 8500 | 180 | 200 | 140 | 2,99 |
| ISC/L 95 x 135 | 11900 | 240 | 210 | 150 | 3,20 | 10000 | 180 | 190 | 140 | 3,20 |
| ISC/L 100 x 145 | 15400 | 280 | 210 | 150 | 3,94 | 13300 | 270 | 200 | 150 | 4,14 |
| ISC/L 110 x 155 | 16900 | 280 | 190 | 140 | 4,30 | 14600 | 270 | 200 | 180 | 4,52 |
| ISC/L 120 x 165 | 22100 | 350 | 210 | 150 | 4,60 | 19100 | 250 | 220 | 160 | 4,84 |
| ISC/L 130 x 180 | 23600 | 420 | 190 | 140 | 10,10 | 20400 | 300 | 200 | 140 | 5,00 |
| ISC/L 140 x 190 | 30200 | 450 | 190 | 140 | 10,50 | 25000 | 350 | 190 | 140 | 10,50 |
| ISC/L 150 x 200 | 36400 | 490 | 200 | 150 | 11,00 | 30100 | 350 | 200 | 150 | 11,00 |

Other sizes available, please enquire.

# Dimensions

## ISR - Inkofix-shrink ring

The INKOMA-Inkofix-shrink ring series ISR is for friction-locked shaft-hub connection.
The required force for torque transmission is provided by tapered external rings which are engaged by tensioning screws causing the inner ring to clamp the hub firmly onto the shaft.
All INKOMA-Inkofix-shrink rings are supplied ready-to-assemble. They can be frequently re-used if handled carefully and the conical components are re-lubricated.
INKOMA-Inkofix-shrink rings are available for all intermediate values of shaft diameter. The applicable transmissible torque can be derived by interpolation.
The given values for transmissible torque are achieved for a shaft to hub friction coefficient of $\mu$ = 0,15. The listed torque values are only applicable when the recommended values for shaft and hub tolerance are applied. Larger clearance of the fit reduces the transmitted torque. The surface roughness should, under no circumstances exceed 15 $\mu$. To achieve the highest possible friction between shaft and hub, both must be grease free in the area of the connection. Screws and conical surfaces must be lubricated with grease. Socket head cap screws to ISO 4014 (DIN 931) class 10.9 are used.
Should transmission of axial loads and torque be applied coincidentally the values must be added vectorially.

$$T_V = \sqrt{T^2_{Table} + \left(\frac{d_w \cdot F_{ax}}{2}\right)^2}$$

**Assembly:**
Contact surfaces of the shaft and bore should be de-greased with solvent or degreaser. Tension screws should be tightened in two or three stages up to the recommended tightening torque $T_A$.

**Disassembly:**
Release all the screws in turn. The disc is not self-locking so disengage this from the conical surface. Should dirt or fretting prevent this a sharp tap from a copper or plastic hammer will effect release.

**Version A**

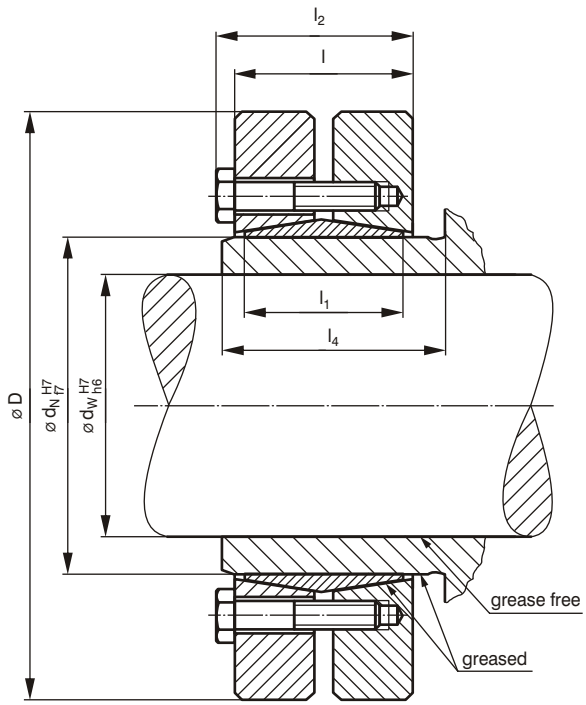


**Explanation:**

| | | |
|---|---|---|
| T | = | maximum transmissible torque for an Inkofix-shrink ring |
| $F_{ax}$ | = | maximum axial force which may be applied to an Inkofix-shrink ring |
| $T_A$ | = | the required tightening torque for the tensioning screws |

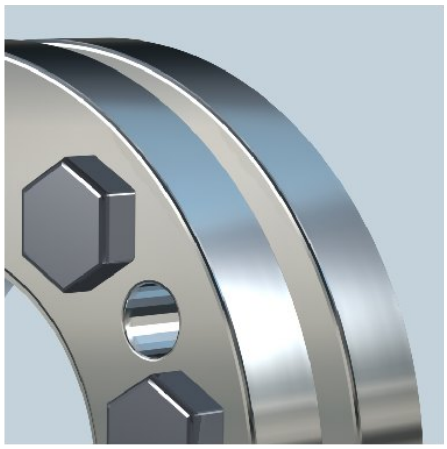

## Ordering example:

Inkofix-shrink ring
Hub diameter
External diameter
Index of version

**ISR 180.340 / A**

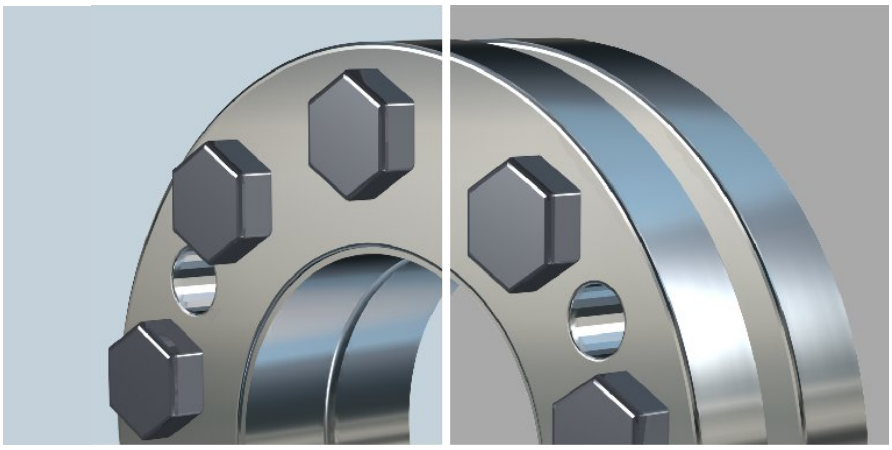

| Order code | Dimensions [mm] | | | | | | | Tension screw | |
|---|---|---|---|---|---|---|---|---|---|
| | $d_w$ | $d_N$ | D | l | $l_1$ | $l_2$ | $l_4$ | ISO 4014 (DIN 931) 10.9 | Tightening torque $T_A$ [Nm] |
| ISR 24.50 | 19 - 22 | 24 | 50 | 18 | 15 | 22 | 20 | 6xM5x16 | 7 |
| ISR 30.60 | 23 - 27 | 30 | 60 | 20 | 17 | 24 | 25 | 6xM6x16 | 12 |
| ISR 36.72 | 28 - 32 | 36 | 72 | 22 | 20 | 26 | 28 | 6xM6x20 | 12 |
| ISR 44.80 | 33 - 37 | 44 | 80 | 24 | 21 | 28 | 30 | 8xM6x20 | 12 |
| ISR 50.90 | 38 - 42 | 50 | 90 | 26 | 24 | 30 | 35 | 8xM6x20 | 12 |
| ISR 55.100 | 43 - 48 | 55 | 100 | 30 | 26 | 34 | 35 | 10xM6x25 | 12 |
| ISR 62.110 | 49 - 52 | 62 | 110 | 32 | 28 | 36 | 40 | 10xM6x25 | 12 |
| ISR 68.120 | 53 - 60 | 68 | 120 | 36 | 32 | 40 | 40 | 10xM6x30 | 32 |
| ISR 80.155 | 61 - 68 | 80 | 155 | 42 | 36 | 47,5 | 46 | 12xM8x35 | 32 |
| ISR 100.175 | 69 - 80 | 100 | 175 | 50 | 40 | 55,5 | 55 | 15xM8x40 | 32 |
| ISR 110.190 | 81 - 90 | 110 | 190 | 54 | 46 | 61 | 60 | 12xM10x45 | 60 |
| ISR 125.220 | 91 - 100 | 125 | 220 | 60 | 52 | 68 | 65 | 14xM12x50 | 110 |
| ISR 140.245 | 101 - 115 | 140 | 245 | 74 | 65 | 82 | 80 | 16xM12x60 | 110 |
| ISR 165.290 | 116 - 130 | 165 | 290 | 90 | 80 | 100 | 95 | 12xM16x75 | 250 |
| ISR 180.340 | 131 - 145 | 180 | 340 | 105 | 90 | 115 | 110 | 16xM16x80 | 250 |
| ISR 200.355 | 146 - 160 | 200 | 355 | 115 | 100 | 125 | 120 | 18xM16x100 | 250 |
| ISR 220.370 | 161 - 175 | 220 | 370 | 135 | 120 | 145 | 140 | 18xM16x110 | 250 |
| ISR 240.410 | 176 - 190 | 240 | 410 | 145 | 130 | 158 | 150 | 16xM20x120 | 480 |
| ISR 260.440 | 191 - 210 | 260 | 440 | 160 | 140 | 173 | 170 | 18xM20x130 | 480 |

| Order code | Operational data | | | Mass |
|---|---|---|---|---|
| | Torque [1] T [Nm] | max. axial force [1] $F_{ax}$ [kN] | Mass moment of inertia J [kg cm²] | [kg] |
| ISR 24.50 | 181 - 236 | 18 - 22 | 0,7 | 0,18 |
| ISR 30.60 | 343 - 403 | 29 - 30 | 2,0 | 0,28 |
| ISR 36.72 | 448 - 654 | 32 - 40,8 | 4,0 | 0,5 |
| ISR 44.80 | 682 - 860 | 35 - 46 | 6,0 | 0,6 |
| ISR 50.90 | 966 - 1446 | 51 - 68 | 11,0 | 0,8 |
| ISR 55.100 | 1220 - 1940 | 57 - 81 | 18,0 | 1,1 |
| ISR 62.110 | 1820 - 2300 | 75 - 88 | 30,0 | 1,5 |
| ISR 68.120 | 2400 - 3250 | 90 - 108 | 43,0 | 1,8 |
| ISR 80.155 | 3300 - 4300 | 110 - 127 | 148,0 | 3,8 |
| ISR 100.175 | 6200 - 9200 | 179 - 230 | 260,0 | 5,1 |
| ISR 110.190 | 9400 - 13400 | 232 - 297 | 410,0 | 6,8 |
| ISR 125.220 | 16800 - 19600 | 370 - 392 | 840,0 | 10,5 |
| ISR 140.245 | 24000 - 34000 | 474 - 591 | 1610,0 | 16,2 |
| ISR 165.290 | 41000 - 59000 | 706 - 907 | 3910,0 | 28,1 |
| ISR 180.340 | 60000 - 85000 | 1060 - 1170 | 8550,0 | 46,2 |
| ISR 200.355 | 93900 - 130000 | 1286 - 1625 | 11000,0 | 53,0 |
| ISR 220.370 | 131000 - 162000 | 1630 - 1850 | 15170,0 | 65,5 |
| ISR 240.410 | 165000 - 207000 | 2225 - 2250 | 25270,0 | 88,6 |
| ISR 260.440 | 221000 - 275000 | 2310 - 2620 | 35880,0 | 108,8 |

[1] The values for T and $F_{ax}$ can be be interpolated from $d_w$.
Other sizes available, please enquire.

# Dimensions

## ISS - Inkofix-shrink disc

The INKOMA-Inkofix-shrink disc series ISS is for friction-locked shaft-hub connection. The required force for torque transmission is provided by conical external and internal rings which are engaged by tensioning screws, causing the inner ring to clamp the hub firmly onto the shaft. The hub inner ring can be produced to intermediate sizes. The transmissible torque value in the table can only be achieved if the recommended tolerances between shaft and hub are provided. Larger clearance of the fit will result in lower transmitted torque. The surface roughness should, under no circumstances, exceed 15 $\mu$. To achieve the highest possible friction between shaft and hub, both must be grease free in the area of the connection. Screws and conical surfaces must be lubricated with grease. Hexagon head screws to ISO 4017 (DIN 933) class 10.9 are used. The long conical surfaces allow very high concentricity to be achieved. These comonents are therefore suitable for high speed rotation.

**Assembly:**
INKOMA-Inkofix-shrink discs are supplied ready-to-assemble. They can be frequently re-used if handled carefully and the conical components are re-lubricated.

1. Degrease the shaft and hub bore.
2. Lubricate the fitting surfaces of the hub part of the shrink disc.
3. Slide the shrink disc onto the hub.
4. Slide the hub part into position on the shaft seat.
5. Lightly tighten the tension screws in clockwise sequence in a number of stages until the recommended tightening torque $T_A$ is achieved. The correct tension is reached when the end surfaces of the outer ring and the inner ring coincide.

**Disassembly:**
1. Loosen the tension screws sequentially. This should be caried out in sequence in stages. Do not completely remove the tension screws.
2. Fit two or three of the screws in the dismounting holes and tighten opposites until the tension ring loosens.
3. Remove the tension ring and hub.

**Version A**

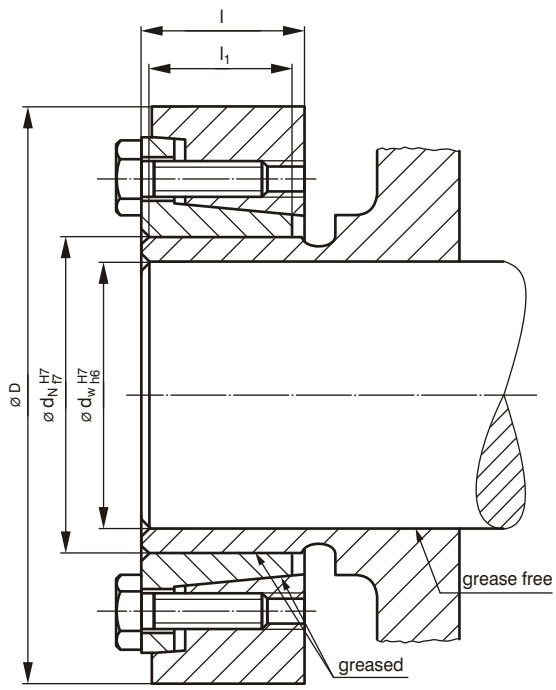


**Explanation:**

| | | |
|---|---|---|
| T | = | maximum transmissible torque for an Inkofix-shrink disc |
| $F_{ax}$ | = | maximum axial force which may be applied to an Inkofix-shrink disc |
| $T_A$ | = | the required tightening torque for the tensioning screws |

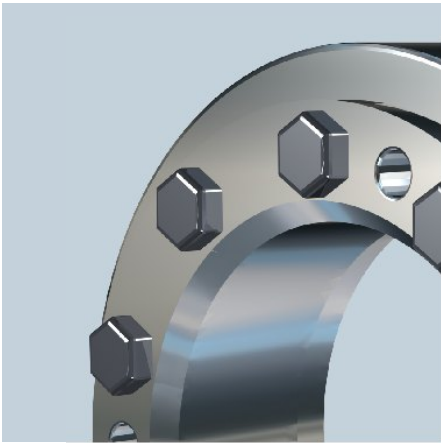

## Ordering example:

Inkofix-shrink disc
Hub diameter
External diameter
Index for version

**ISS 55.100 / A**

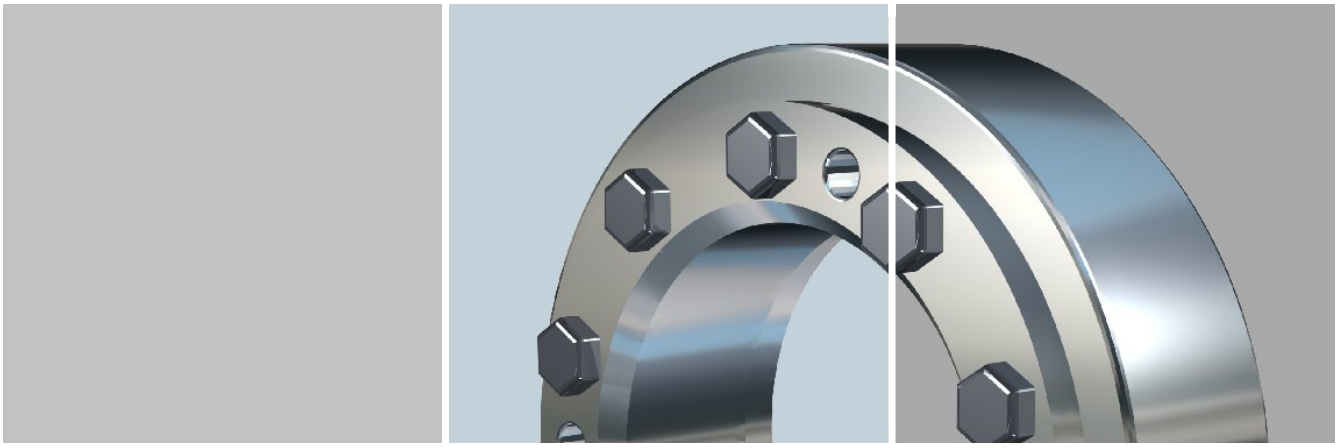

| Order code | Dimensions [mm] | | | | | Tension screw | |
|---|---|---|---|---|---|---|---|
| | $d_w$ | $d_N$ | D | l | $l_1$ | ISO 4017 (DIN 933) 10.9 | Tightening torque $T_A$ [Nm] |
| ISS 12.32 | 10 | 12 | 32 | 11 | 9 | 5xM5x10 | 7 |
| ISS 14.38 | 12 | 14 | 38 | 12 | 10 | 5xM5x10 | 7 |
| ISS 16.42 | 14 | 16 | 42 | 15 | 12 | 6xM5x12 | 7 |
| ISS 18.45 | 15 - 16 | 18 | 45 | 15 | 12 | 6xM5x12 | 7 |
| ISS 20.48 | 17 - 18 | 20 | 48 | 15 | 12 | 6xM5x12 | 7 |
| ISS 24.52 | 19 - 22 | 24 | 52 | 18 | 14 | 8xM5x16 | 7 |
| ISS 30.62 | 24 - 26 | 30 | 62 | 20 | 16 | 8xM5x16 | 7 |
| ISS 36.74 | 28 - 32 | 36 | 74 | 22 | 18 | 8xM6x16 | 12 |
| ISS 44.80 | 34 - 36 | 44 | 80 | 24 | 20 | 8xM6x16 | 12 |
| ISS 50.90 | 38 - 42 | 50 | 90 | 26 | 21 | 8xM6x16 | 12 |
| ISS 55.100 | 42 - 48 | 55 | 100 | 29 | 23 | 8xM6x16 | 12 |
| ISS 62.110 | 48 - 52 | 62 | 110 | 29 | 23 | 10xM6x16 | 12 |
| ISS 68.115 | 50 - 60 | 68 | 115 | 29 | 23 | 10xM6x16 | 12 |
| ISS 75.138 | 55 - 65 | 75 | 138 | 31 | 24 | 10xM8x25 | 32 |
| ISS 80.145 | 60 - 70 | 80 | 145 | 31 | 24 | 10xM8x25 | 32 |
| ISS 90.155 | 65 - 75 | 90 | 155 | 38 | 31 | 12xM8x25 | 32 |
| ISS 100.170 | 70 - 80 | 100 | 170 | 43 | 36 | 15xM8x25 | 32 |
| ISS 110.185 | 80 - 90 | 110 | 185 | 49 | 41 | 12xM10x35 | 60 |
| ISS 125.215 | 90 - 100 | 125 | 215 | 53 | 44 | 15xM10x35 | 60 |

| Order code | Operational data | | | Mass |
|---|---|---|---|---|
| | Torque [1] T [Nm] | max. axial force [1] $F_{ax}$ [kN] | Mass moment of inertia J [kg cm²] | [kg] |
| ISS 12.32 | 38 | 8 | 0,09 | 0,058 |
| ISS 14.38 | 52 | 9 | 0,2 | 0,083 |
| ISS 16.42 | 90 | 13 | 0,3 | 0,12 |
| ISS 18.45 | 80 - 112 | 10 - 14 | 0,4 | 0,135 |
| ISS 20.48 | 140 - 184 | 16 - 20 | 0,5 | 0,150 |
| ISS 24.52 | 160 - 280 | 17 - 25 | 0,9 | 0,210 |
| ISS 30.62 | 280 - 360 | 23 - 27 | 1,9 | 0,32 |
| ISS 36.74 | 550 - 740 | 37 - 46 | 3,0 | 0,40 |
| ISS 44.80 | 700 - 850 | 41 - 47 | 7,0 | 0,65 |
| ISS 50.90 | 1100 - 1540 | 55 - 72 | 11,0 | 0,86 |
| ISS 55.100 | 1130 - 1850 | 54 - 77 | 18,0 | 1,1 |
| ISS 62.110 | 1690 - 2170 | 69 - 84 | 26,0 | 1,32 |
| ISS 68.115 | 1800 - 3100 | 73 - 103 | 32,0 | 1,45 |
| ISS 75.138 | 2700 - 4300 | 97 - 133 | 56,0 | 1,80 |
| ISS 80.145 | 3250 - 4700 | 108 - 133 | 66,0 | 1,92 |
| ISS 90.155 | 4700 - 7200 | 145 - 190 | 137,0 | 3,4 |
| ISS 100.170 | 5920 - 8900 | 170 - 220 | 233,0 | 4,8 |
| ISS 110.185 | 9050 - 12600 | 226 - 280 | 347,0 | 6,0 |
| ISS 125.215 | 12850 - 17000 | 280 - 340 | 657,0 | 8,5 |

[1] The values for T and $F_{ax}$ can be be interpolated from $d_w$.
Other sizes available, please enquire.

# Dimensions

## ISP - Inkofix-tension flange

The INKOMA-Inkofix-tension flange series ISP transmits torque via an inner and outer ring using friction. The required interference is created using conical inner and outer rings tensioned by screws. The transmissible torque stated in the table assumes the use of the stated tolerances for the diameters connected. Larger clearance of the fit will reduce the torque transmissible. Surface roughness should in no circumstances be greater than 15 $\mu$. For the best friction effect between shaft and bore the surfaces should be free of lubricant. Screws and conical surfaces should be greased. Hexagon head screws to ISO 4017 (DIN 933) class 10.9 are used. The ISP tension flange is used as an economical and simple method for securing flange like elements. The range includes units for use with our PK, LFK and IFK couplings. Other applications include sprockets, pulleys and gears. In most cases the outer diameter of the tension flange is designed for compatability with the INKOMA coupling range but can also be made with smaller outside diameters. Alternative hole patterns for the securing of other components are also offered.

**Assembly:**
INKOMA-Inkofix-shrink discs are supplied ready-to-assemble. They can be frequently re-used if handled carefully and the conical components are re-lubricated.

1. Degrease the shaft and tension flange bore.
2. Lightly engage the screws and slide into position on the shaft.
3. Lightly tighten the tension screws in clockwise sequence in gradual stages until the recommended tightening torque $T_A$ is achieved.
4. Once the tension flange is fitted the flange component, coupling hub, gear, sprocket, etc. can be secured to the tension flange. The design prevents any possible distortion of the flange.

**Disassembly:**
1. Loosen the tension screws sequentially, in gradual stages.
2. Should the tension ring not loosen, insert screws in some of the dismounting holes and screw in until the inner and outer rings separate.

**Version A**

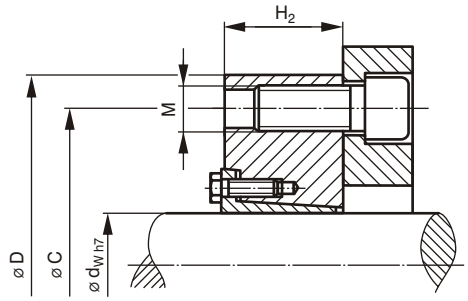


**Version B**

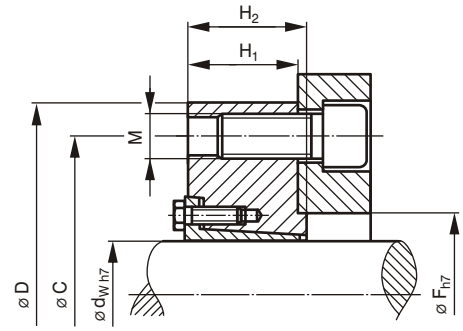


**Version C**

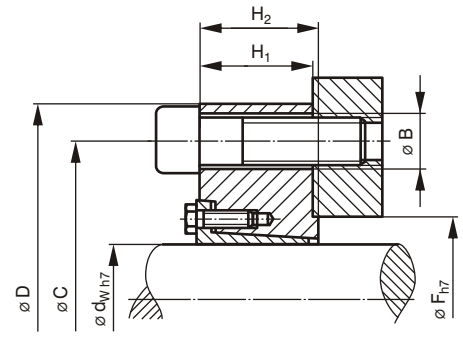


## Ordering example:

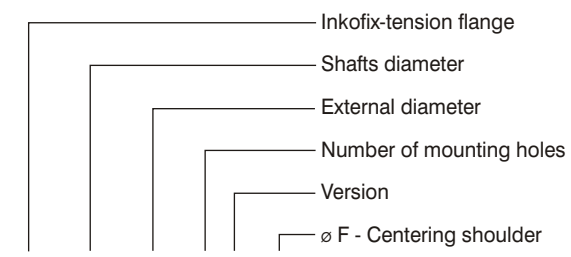


**ISP 30.110/4 B 50**

**Explanation:**

| | | |
|---|---|---|
| T | = | maximum transmissible torque for an Inkofix-tension flange |
| $F_{ax}$ | = | maximum axial force which may be applied to an Inkofix-tension flange |
| $T_A$ | = | the required tightening torque for the tensioning screws |

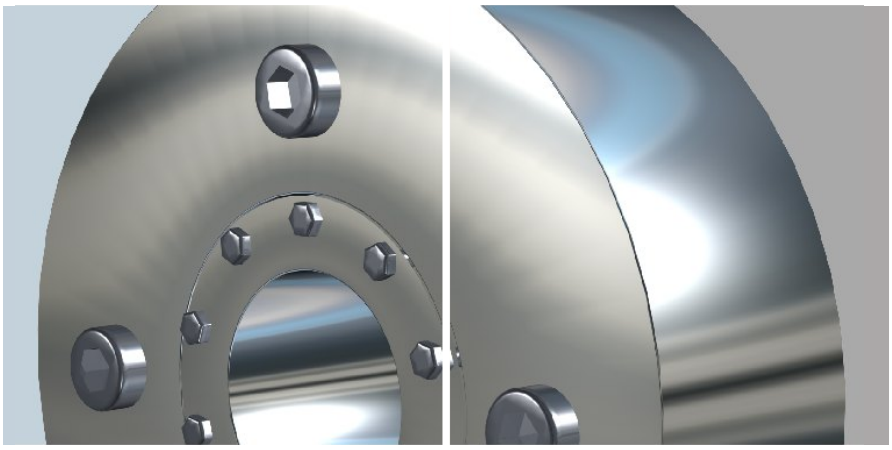

| Order code | Dimensions [mm] | | | | | | | | Tension screw | | Operational data | | | Mass |
|---|---|---|---|---|---|---|---|---|---|---|---|---|---|---|
| | Preferred dimensions | | | | | | | | | | | | | |
| | $d_W$ | F | C | D | $H_1$ | $H_2$ | M | B | ISO 4017 (DIN 933) 10.9 | Tightening torque $T_A$ [Nm] | Torque T [Nm] | max. axial force $F_{ax}$ [kN] | Mass moment of inertia J [kg cm²] | [kg] |
| ISP 16.60/3 [1] | 16 | 25 | 48 | 60 | 14 | 16 | M8 | - | 6xM5x10 | 7 | 125 | 16 | 1,4 | 0,29 |
| ISP 16.66/4 | 16 | 25 | 56 | 66 | 12 | 14 | M6 | 6,6 | 6xM5x10 | 7 | 90 | 13 | 1,7 | 0,30 |
| ISP 16.66/6 | 16 | 25 | 56 | 66 | 12 | 14 | M6 | 6,6 | 6xM5x10 | 7 | 90 | 13 | 1,7 | 0,30 |
| ISP 25.82/3 | 25 | 45 | 70 | 82 | 14 | 17 | M8 | 9 | 8xM5x16 | 7 | 340 | 27 | 4,9 | 0,53 |
| ISP 25.82/4 | 25 | 45 | 70 | 82 | 14 | 17 | M8 | 9 | 8xM5x16 | 7 | 340 | 27 | 4,9 | 0,53 |
| ISP 30.90/3 [1] | 30 | 40 | 70 | 90 | 20 | 23 | M12 | - | 8xM5x16 | 7 | 830 | 55 | 10 | 0,89 |
| ISP 30.110/3 | 30 | 50 | 90 | 110 | 25 | 28 | M12 | 14 | 8xM5x16 | 7 | 982 | 65 | 28 | 1,73 |
| ISP 30.110/4 | 30 | 50 | 90 | 110 | 25 | 28 | M12 | 14 | 8xM5x16 | 7 | 982 | 65 | 28 | 1,73 |
| ISP 30.115/3 | 30 | 50 | 98 | 115 | 16 | 19 | M8 | 9 | 8xM5x16 | 7 | 680 | 45 | 21,5 | 1,22 |
| ISP 30.115/4 | 30 | 50 | 98 | 115 | 16 | 19 | M8 | 9 | 8xM5x16 | 7 | 680 | 45 | 21,5 | 1,22 |
| ISP 35.125/3 | 35 | 55 | 100 | 125 | 35 | 38 | M16 | 18 | 8xM6x16 | 12 | 1385 | 79 | 65 | 3,10 |
| ISP 35.130/3 | 35 | 50 | 110 | 130 | 30 | 33 | M12 | 14 | 8xM6x16 | 12 | 1195 | 68 | 66 | 2,90 |
| ISP 35.130/4 | 35 | 50 | 110 | 130 | 30 | 33 | M12 | 14 | 8xM6x16 | 12 | 1195 | 68 | 66 | 2,90 |
| ISP 35.145/4 | 35 | 60 | 128 | 145 | 20 | 23 | M8 | 9 | 8xM6x16 | 12 | 850 | 49 | 68 | 2,44 |
| ISP 40.140/3 | 40 | 60 | 115 | 140 | 40 | 43 | M16 | 18 | 8xM6x16 | 12 | 2460 | 123 | 118 | 4,44 |
| ISP 40.140/4 | 40 | 60 | 115 | 140 | 40 | 43 | M16 | 18 | 8xM6x16 | 12 | 2460 | 123 | 118 | 4,44 |
| ISP 40.145/3 | 40 | 60 | 120 | 145 | 35 | 38 | M16 | 18 | 8xM6x16 | 12 | 2220 | 111 | 119 | 4,19 |
| ISP 40.145/4 | 40 | 60 | 120 | 145 | 35 | 38 | M16 | 18 | 8xM6x16 | 12 | 2220 | 111 | 119 | 4,19 |
| ISP 40.150/3 | 40 | 60 | 130 | 150 | 30 | 33 | M12 | 14 | 8xM6x16 | 12 | 1920 | 96 | 117 | 3,90 |
| ISP 40.150/4 | 40 | 60 | 130 | 150 | 30 | 33 | M12 | 14 | 8xM6x16 | 12 | 1920 | 96 | 117 | 3,90 |
| ISP 45.160/3 | 45 | 70 | 135 | 160 | 45 | 48 | M16 | 18 | 10xM6x16 | 12 | 3000 | 133 | 226 | 6,54 |
| ISP 45.160/4 | 45 | 70 | 135 | 160 | 45 | 48 | M16 | 18 | 10xM6x16 | 12 | 3000 | 133 | 226 | 6,54 |
| ISP 50.180/3 | 50 | 80 | 152 | 180 | 50 | 53 | M16 | 18 | 10xM6x20 | 12 | 4100 | 164 | 402 | 9,21 |
| ISP 50.180/4 | 50 | 80 | 152 | 180 | 50 | 53 | M16 | 18 | 10xM6x20 | 12 | 4100 | 164 | 402 | 9,21 |
| ISP 50.185/3 | 50 | 80 | 150 | 185 | 60 | 65 | M20 | 22 | 10xM6x20 | 12 | 5200 | 208 | 538 | 11,73 |
| ISP 50.185/4 | 50 | 80 | 150 | 185 | 60 | 65 | M20 | 22 | 10xM6x20 | 12 | 5200 | 208 | 538 | 11,73 |
| ISP 60.230/4 | 60 | 100 | 200 | 230 | 70 | 75 | M20 | 22 | 10xM6x20 | 12 | 9800 | 327 | 1500 | 21,27 |
| ISP 60.230/5 | 60 | 100 | 200 | 230 | 70 | 75 | M20 | 22 | 10xM6x20 | 12 | 9800 | 327 | 1500 | 21,27 |
| ISP 60.230/6 | 60 | 100 | 200 | 230 | 70 | 75 | M20 | 22 | 10xM6x20 | 12 | 9800 | 327 | 1500 | 21,27 |
| ISP 80.290/6 | 80 | 150 | 260 | 290 | 75 | 80 | M20 | 22 | 10xM8x25 | 32 | 13600 | 340 | 4061 | 35,90 |

[1] Version C is not available.
Spacing of the mounting holes: 3 x 120° = 360° / 4 x 90° = 360° / 5 x 72° = 360° / 6 x 60° = 360°

# Dimensions

## ISK - Inkofix-shrink coupling

The INKOMA-Inkofix-shrink coupling series ISK is for the rigid keyless coupling of shafts having the same or similar diameters. The required force for torque transmission is provided by pressure and friction via the inside conical rings causing the inner ring to clamp firmly onto the shafts.
All INKOMA-Inkofix-shrink couplings are delivered ready for use.
If carefully treated (with the lubrication of the conical surfaces renewed every time), Inkofix-shrink couplings may be dismantled and remounted as often as necessary. INKOMA-Inkofix-shrink couplings are available for all intermediate values of shaft diameter.
The applicable transmissible torque can be derived by interpolation. When the torque and the axial force overlap, their values must be added vectorially.

$$T_V = \sqrt{T^2_{Table} + \left(\frac{d_w \cdot F_{ax}}{2}\right)^2}$$

The surface quality must always be better than 15 $\mu$. Hexagon head screws to ISO 4014 (DIN 931) class 10.9 are used.
The torque and axial loads indicated will be transmitted under the following conditions:
1. the coefficient of friction between shaft and hole must be greater than $\mu$=0,15
2. the quality of the clearance of the fit between shaft and hole is as indicated.

Greater clearance of the fit penalises torque transmission. Less clearance of the fit enhances torque transmission.

**Assembly:**
Contact surfaces of the shaft and bore should be de-greased with solvent or degreaser. Tension screws should be tightened in two or three stages up to the recommended tightening torque $T_A$.

**Disassembly:**
The clamping force is released by loosening the screws. If necessary remove some of the screws and use as dismounting screws.

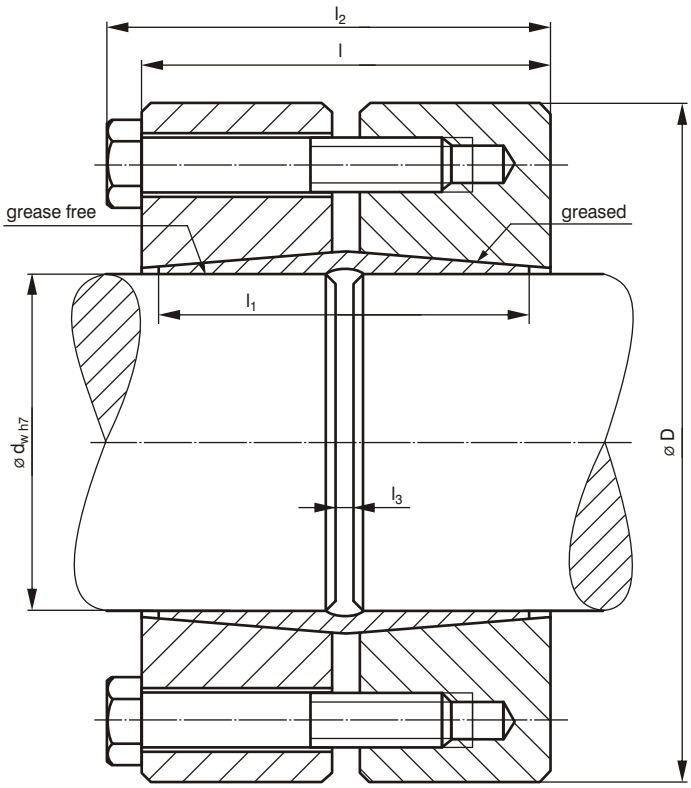


**Explanation:**

| | | |
|---|---|---|
| T | = | maximum transmissible torque for an Inkofix-shrink coupling |
| $F_{ax}$ | = | maximum axial force which may be applied to an Inkofix-shrink coupling |
| $T_A$ | = | the required tightening torque for the tensioning screws |

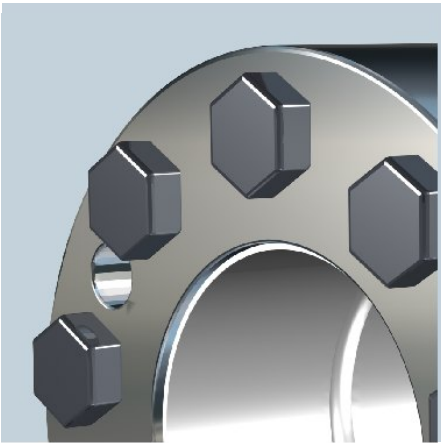

## Ordering example:

Inkofix-shrink coupling
Shafts diameter
External diameter

**ISK 100.195**

| Order code | Dimensions [mm] | | | | | | Tension screw | |
|---|---|---|---|---|---|---|---|---|
| | $d_w$ [2] | D | l | $l_1$ | $l_2$ | $l_3$ | ISO 4017 (DIN 933) 10.9 | Tightening torque $T_A$ [Nm] |
| ISK 10.40 | 10 - 12 | 40 | 24 | 22 | 27,5 | 1 | 5xM5x20 | 7 |
| ISK 13.43 | 13 - 15 | 43 | 30 | 28 | 33,5 | 1 | 6xM5x25 | 7 |
| ISK 16.46 | 16 - 18 | 46 | 34 | 32 | 37,5 | 1 | 6xM5x30 | 7 |
| ISK 20.50 | 19 - 22 | 50 | 40 | 37 | 44 | 2 | 6xM6x30 | 13 |
| ISK 25.60 | 23 - 27 | 60 | 44 | 41 | 48 | 2 | 6xM6x35 | 13 |
| ISK 30.72 | 28 - 32 | 72 | 48 | 45 | 52 | 3 | 8xM6x40 | 13 |
| ISK 35.80 | 33 - 37 | 80 | 56 | 52 | 61,5 | 3 | 8xM8x45 | 32 |
| ISK 40.94 | 38 - 42 | 94 | 58 | 54 | 63,5 | 4 | 9xM8x50 | 32 |
| ISK 45.102 | 43 - 48 | 102 | 68 | 64 | 75 | 4 | 8xM10x50 | 60 |
| ISK 50.110 | 49 - 52 | 110 | 74 | 70 | 81 | 4 | 9xM10x60 | 60 |
| ISK 60.120 | 52 - 60 | 120 | 78 | 74 | 85 | 5 | 9xM10x60 | 60 |
| ISK 65.140 | 61 - 68 | 140 | 92 | 86 | 100 | 5 | 9xM12x70 | 110 |
| ISK 80.160 | 59 - 80 | 160 | 104 | 98 | 112 | 5 | 12xM12x75 | 110 |
| ISK 90.180 | 81 - 90 | 180 | 120 | 112 | 130 | 5 | 12xM16x90 | 250 |
| ISK 100.195 | 91 - 100 | 195 | 128 | 120 | 138 | 6 | 12xM16x90 | 250 |
| ISK 115.220 | 101 - 115 | 220 | 140 | 132 | 150 | 6 | 12xM16x100 | 250 |
| ISK 120.256 | 116 - 130 | 256 | 164 | 150 | 177 | 6 | 12xM20x120 | 480 |
| ISK 135.285 | 131 - 145 | 285 | 178 | 164 | 191 | 7 | 15xM20x120 | 480 |
| ISK 150.300 | 146 - 160 | 300 | 194 | 180 | 207 | 7 | 15xM20x140 | 480 |
| ISK 165.325 | 161 - 175 | 325 | 204 | 190 | 217 | 8 | 15xM20x140 | 480 |
| ISK 180.350 | 176 - 190 | 350 | 224 | 210 | 237 | 8 | 15xM20x150 | 480 |
| ISK 200.375 | 191 - 210 | 375 | 244 | 230 | 259 | 8 | 15xM24x160 | 840 |
| ISK 220.410 | 211 - 230 | 410 | 280 | 260 | 295 | 10 | 16xM24x180 | 840 |
| ISK 240.430 | 231 - 250 | 430 | 300 | 280 | 315 | 12 | 18xM24x200 | 840 |

| Order code | Operational data | | | Mass |
|---|---|---|---|---|
| | Torque [1] T [Nm] | max. axial force [1] $F_{ax}$ [kN] | Mass moment of inertia J [kg cm²] | [kg] |
| ISK 10.40 | 30 - 36 | 6 | 0,4 | 0,20 |
| ISK 13.43 | 70 - 90 | 11 - 12 | 0,7 | 0,29 |
| ISK 16.46 | 180 - 210 | 19 - 23 | 1,1 | 0,37 |
| ISK 20.50 | 230 - 330 | 24 - 30 | 1,7 | 0,48 |
| ISK 25.60 | 370 - 520 | 32 - 39 | 4,0 | 0,75 |
| ISK 30.72 | 580 - 820 | 41 - 51 | 9,0 | 1,2 |
| ISK 35.80 | 900 - 1310 | 55 - 70 | 16,0 | 1,7 |
| ISK 40.94 | 1400 - 1890 | 74 - 90 | 31,0 | 2,4 |
| ISK 45.102 | 2050 - 2725 | 96 - 114 | 47,0 | 3,1 |
| ISK 50.110 | 2900 - 3210 | 119 - 123 | 75,0 | 4,1 |
| ISK 60.120 | 3460 - 5200 | 131 - 173 | 110,0 | 4,9 |
| ISK 65.140 | 5420 - 7230 | 178 - 212 | 241,0 | 8,1 |
| ISK 80.160 | 8340 - 11800 | 242 - 295 | 464,0 | 11,6 |
| ISK 90.180 | 12800 - 16100 | 320 - 358 | 851,0 | 16,8 |
| ISK 100.195 | 16800 - 22430 | 370 - 450 | 1243,0 | 20,7 |
| ISK 115.220 | 23600 - 36800 | 468 - 640 | 2203,0 | 28,6 |
| ISK 120.256 | 37500 - 54600 | 648 - 840 | 4278,0 | 44,5 |
| ISK 135.285 | 56300 - 71400 | 860 - 985 | 6804,0 | 58,0 |
| ISK 150.300 | 78500 - 88300 | 994 - 1100 | 10533,0 | 74,9 |
| ISK 165.325 | 89700 - 119900 | 1115 - 1370 | 15245,0 | 91,8 |
| ISK 180.350 | 121300 - 165400 | 1390 - 1740 | 22596,0 | 116,7 |
| ISK 200.375 | 167200 - 206600 | 1770 - 1960 | 32219,0 | 142,7 |
| ISK 220.410 | 210000 - 264000 | 1990 - 2295 | 52880,0 | 195,4 |
| ISK 240.430 | 278000 - 335000 | 2400 - 2680 | 66718,0 | 220,1 |

[1] The values for T and $F_{ax}$ can be be interpolated from $d_w$.
[2] State diameter $d_w$ when ordering. Other diameters are available with additional price. Please enquire.

# Dimensions

## ISB - Inkofix-tension sleeve

The INKOMA-Inkofix-tension sleeves are shaft-hub connections suitable for high torque transmission. The self centering feature guarantees concentric running.
The force necessary for torque transmission through the non positive connection is generated by pressure and friction via the conical ring between the hub and the shaft. The sleeves are delivered ready for installation. i.e. the conical surfaces are suitably greased and the contact surface coated with a light film of oil.
The hub and shaft must be cleaned thoroughly. To achieve concentric running and the stated figures for torque transmission, the tolerances for the shaft and the bore of the hub must be as indicated in the table. The surface finish should be $<15\,\mu m$. Since the bore of the hub tends to be expanded by the pressure of the tension sleeve, care should be taken to maintain this within the eleastic limit of the material. i.e. the wall thickness of the hub must be adequate.
Using the formula for thick walled tubes under internal pressure an equation can be derived with sufficient security.

$$d_N \geq D \sqrt{\frac{\sigma_{0,2} + p_N \cdot C}{\sigma_{0,2} - p_N \cdot C}}$$

The limit of elasticity of the hub material must always be higher than the pressure generated by the tension set inside the bore of the hub.
If carefully treated (with the lubrication of the conical surfaces renewed every time), friction locking bushes may be dismantled and remounted as often as necessary, provided the operating surfaces are free from notches and scratches.
The clamping force can be easily released by use of the threaded dismantling hole.
Before re-use the parts of the friction locking bush must be cleaned and the screws and conical surfaces re-lubricated.
When the torque and the axial force overlap, their values must be added vectorially.

$$T_R = \sqrt{T^2_{Table} + \left(\frac{d_w \cdot F_{ax}}{2}\right)^2}$$

$T_R$ is the resulting reduced transmissible torque. All friction locking bushes are delivered ready for installation. Friction locking bushes series ISB are equipped with screws quality ISO 4762 (DIN 912) class 12.9.
The friction locking bush should be initially aligned by slightly screwing in opposite sets of screws in turn. Thereafter the screws can be sequentially tightened in 3-4 equal steps until the indicated tightening torque $T_A$ is achieved.

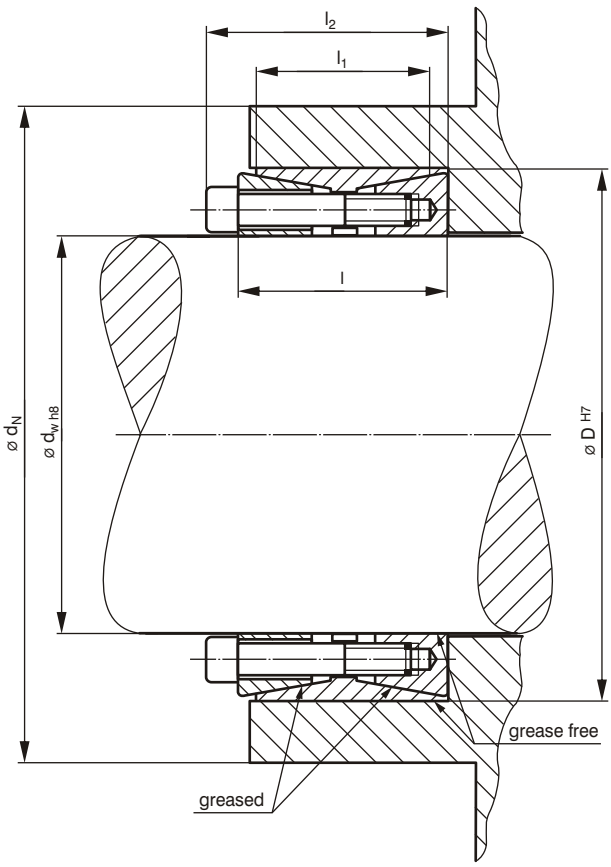


**Explanation:**

| | | |
|---|---|---|
| $\sigma_{0,2}$ | [N/mm²] | limit of elasticity of the hub material |
| $p_N$ | [N/mm²] | permitted surface pressure in the bore of the hub |
| C | [-] | factor for friction locking bush width e.g. C=1 when hub width = friction locking bush width and C=0,6 when hub width = 2x friction locking bush width |
| T | [Nm] | maximum transmissible torque for an Inkofix-tension sleeve |
| $F_{ax}$ | [kN] | maximum axial force which may be applied to an Inkofix-tension sleeve |
| $T_A$ | [Nm] | the required tightening torque for the tensioning screws |

## Ordering example:

Inkofix-tension sleeve
Shafts diameter
External diameter

**ISB 100.145**

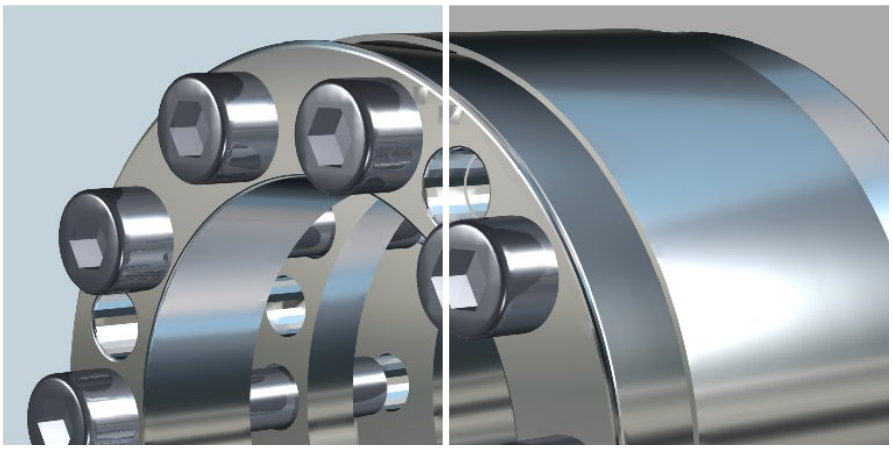

| Order code | Dimensions [mm] | | | | | Tension screw | | Operational data | | | | | Mass |
|---|---|---|---|---|---|---|---|---|---|---|---|---|---|
| | $d_w$ | D | l | $l_1$ | $l_2$ | ISO 4762 (DIN 912) 12.9 | Tightening torque $T_A$ [Nm] | Torque T [Nm] | max. axial force $F_{ax}$ [kN] | Surface pressure between friction locking bush and: Shaft $p_W$ [N/mm²] | Surface pressure between friction locking bush and: Hub $p_N$ [N/mm²] | Mass moment of inertia J [kg cm²] | Mass [kg] |
| ISB 50.80 | 50 | 80 | 44 | 40 | 52 | 8xM8x40 | 41 | 3400 | 136 | 184 | 91 | 13,0 | 1,2 |
| ISB 55.85 | 55 | 85 | 44 | 40 | 52 | 9xM8x40 | 41 | 4740 | 172 | 189 | 96 | 18,0 | 1,4 |
| ISB 60.90 | 60 | 90 | 44 | 40 | 52 | 10xM8x40 | 41 | 5760 | 192 | 186 | 98 | 22,0 | 1,6 |
| ISB 65.95 | 65 | 95 | 44 | 40 | 52 | 10xM8x40 | 41 | 6250 | 193 | 172 | 92 | 28,0 | 1,7 |
| ISB 70.110 | 70 | 110 | 60 | 50 | 70 | 10xM10x50 | 83 | 10290 | 274 | 198 | 101 | 49,0 | 2,3 |
| ISB 75.115 | 75 | 115 | 60 | 50 | 70 | 10xM10x50 | 83 | 11300 | 301 | 157 | 98 | 57,0 | 2,4 |
| ISB 80.120 | 80 | 120 | 60 | 50 | 70 | 10xM10x50 | 83 | 12400 | 310 | 191 | 102 | 65,0 | 2,5 |
| ISB 85.125 | 85 | 125 | 60 | 50 | 70 | 10xM10x50 | 83 | 13500 | 317 | 142 | 98 | 77,0 | 2,7 |
| ISB 90.130 | 90 | 130 | 60 | 50 | 70 | 12xM10x50 | 83 | 15850 | 352 | 184 | 102 | 94,0 | 3,0 |
| ISB 95.135 | 95 | 135 | 70 | 60 | 82 | 12xM12x60 | 145 | 19100 | 402 | 150 | 106 | 126,0 | 3,7 |
| ISB 100.145 | 100 | 145 | 70 | 60 | 82 | 12xM12x60 | 145 | 21500 | 430 | 163 | 93 | 171,0 | 4,4 |
| ISB 110.155 | 110 | 155 | 70 | 60 | 82 | 12xM12x60 | 145 | 26100 | 475 | 159 | 89 | 230,0 | 5,1 |
| ISB 120.165 | 120 | 165 | 70 | 60 | 82 | 12xM12x60 | 145 | 32800 | 546 | 171 | 98 | 291,0 | 5,6 |
| ISB 130.180 | 130 | 180 | 79 | 65 | 93 | 12xM14x70 | 230 | 41000 | 630 | 166 | 96 | 419,0 | 6,8 |
| ISB 140.190 | 140 | 190 | 79 | 65 | 93 | 12xM14x70 | 230 | 52000 | 743 | 178 | 106 | 515,0 | 7,4 |
| ISB 150.200 | 150 | 200 | 79 | 65 | 93 | 12xM14x70 | 230 | 59800 | 800 | 187 | 109 | 617,0 | 7,9 |
| ISB 160.210 | 160 | 210 | 79 | 65 | 93 | 12xM14x70 | 230 | 67300 | 842 | 187 | 110 | 732,0 | 8,4 |
| ISB 170.225 | 170 | 225 | 92 | 78 | 108 | 12xM16x80 | 355 | 77400 | 855 | 154 | 97 | 1123,0 | 11,3 |
| ISB 180.235 | 180 | 235 | 92 | 78 | 108 | 12xM16x80 | 355 | 88200 | 980 | 157 | 98 | 1325,0 | 12,3 |
| ISB 190.250 | 190 | 250 | 102 | 88 | 118 | 12xM16x90 | 355 | 104000 | 1100 | 159 | 98 | 1910,0 | 15,5 |
| ISB 200.260 | 200 | 260 | 102 | 88 | 118 | 12xM16x90 | 355 | 115400 | 1160 | 151 | 96 | 2192,0 | 16,3 |
| ISB 220.285 | 220 | 285 | 108 | 96 | 124 | 12xM16x100 | 355 | 151400 | 1376 | 167 | 102 | 3435,0 | 21,2 |
| ISB 240.305 | 240 | 305 | 108 | 96 | 124 | 12xM16x100 | 355 | 182300 | 1521 | 163 | 106 | 4387,0 | 23,3 |
| ISB 260.325 | 260 | 325 | 180 | 176 | 200 | 12xM20x140 | 690 | 340000 | 2620 | 220 | 170 | 7146,0 | 33,0 |
| ISB 280.355 | 280 | 355 | 206 | 202 | 226 | 14xM20x140 | 690 | 477000 | 3410 | 205 | 170 | 11794,0 | 46,0 |
| ISB 300.375 | 300 | 375 | 206 | 202 | 226 | 14xM20x140 | 690 | 510000 | 3410 | 210 | 165 | 14702,0 | 51,0 |
| ISB 320.405 | 320 | 405 | 206 | 202 | 226 | 14xM20x140 | 690 | 600000 | 3750 | 215 | 170 | 19649,0 | 52,0 |
| ISB 340.425 | 340 | 425 | 206 | 202 | 226 | 14xM20x140 | 690 | 630000 | 3750 | 200 | 160 | 22957,0 | 62,0 |
| ISB 360.455 | 360 | 455 | 263 | 220 | 258 | 20xM22x160 | 930 | 910000 | 3750 | 225 | 180 | 42920,0 | 102,0 |
| ISB 380.475 | 380 | 475 | 263 | 220 | 258 | 20xM22x160 | 930 | 980000 | 5090 | 215 | 170 | 49491,0 | 107,0 |
| ISB 400.495 | 400 | 495 | 263 | 220 | 258 | 20xM22x160 | 930 | 1110000 | 5090 | 220 | 180 | 57210,0 | 113,0 |
| ISB 420.515 | 420 | 515 | 263 | 220 | 258 | 20xM22x160 | 930 | 1160000 | 5500 | 210 | 170 | 65692,0 | 119,0 |
| ISB 440.545 | 440 | 545 | 263 | 220 | 258 | 20xM22x160 | 930 | 1300000 | 5940 | 220 | 170 | 80340,0 | 131,0 |
| ISB 460.565 | 460 | 565 | 263 | 220 | 258 | 20xM22x160 | 930 | 1360000 | 5940 | 210 | 170 | 88913,0 | 134,0 |
| ISB 480.585 | 480 | 585 | 263 | 220 | 258 | 20xM22x160 | 930 | 1520000 | 6370 | 215 | 170 | 100209,0 | 140,0 |
| ISB 500.605 | 500 | 605 | 263 | 220 | 258 | 20xM22x160 | 930 | 1590000 | 6370 | 205 | 170 | 112425,0 | 146,0 |

# Dimensions

## ISH - Inkofix-tension set

INKOMA-Inkofix-tension sets are shaft-hub connections suitable for high torque transmission.They are not self centering.
The force necessary for torque transmission through the non positive connection is generated by pressure and friction via the conical ring between the hub and the shaft. The sleeves are delivered ready for installation. i.e. the conical surfaces are suitably greased and the contact surface coated with a light film of oil.
The hub and shaft must be cleaned thoroughly. To achieve concentric running and the stated figures for torque transmission, the tolerances for the shaft and the bore of the hub must be as indicated in the table. The surface finish should be $<15\,\mu m$.
Since the bore of the hub tends to be expanded by the pressure of the tension sleeve, care should be taken to maintain this within the eleastic limit of the material. i.e. the wall thickness of the hub must be adequate.
Using the formula for thick walled tubes under internal pressure, an equation can be derived with sufficient security.

$$d_N \geq D \sqrt{\frac{\sigma_{0,2} + p_N \cdot C}{\sigma_{0,2} - p_N \cdot C}}$$

The limit of elasticity of the hub material must always be higher than the pressure generated by the tension set inside the bore of the hub If carefully treated (with the lubrication of the conical surfaces renewed every time), friction locking bushes may be dismantled and remounted as often as necessary, provided the operating surfaces are free from notches and scratches.
The clamping force can be easily released by use of the threaded dismantling hole. Before re-use, the parts of the friction locking bush must be cleaned and the screws and conical surfaces re-lubricated.
When the torque and the axial force overlap, their values must be added vectorially.

$$T_V = \sqrt{T^2_{Table} + \left(\frac{d_w \cdot F_{ax}}{2}\right)^2}$$

$T_R$ is the resulting reduced transmissible torque. All friction locking bushes are delivered ready for installation. Friction locking bushes series ISH are equipped with screws quality ISO 4762 (DIN 912).
The friction locking bush should be initially aligned by slightly screwing in opposite sets of screws in turn. Thereafter the screws can be sequentially tightened in 3-4 equal steps until the indicated tightening torque $T_A$ is achieved.

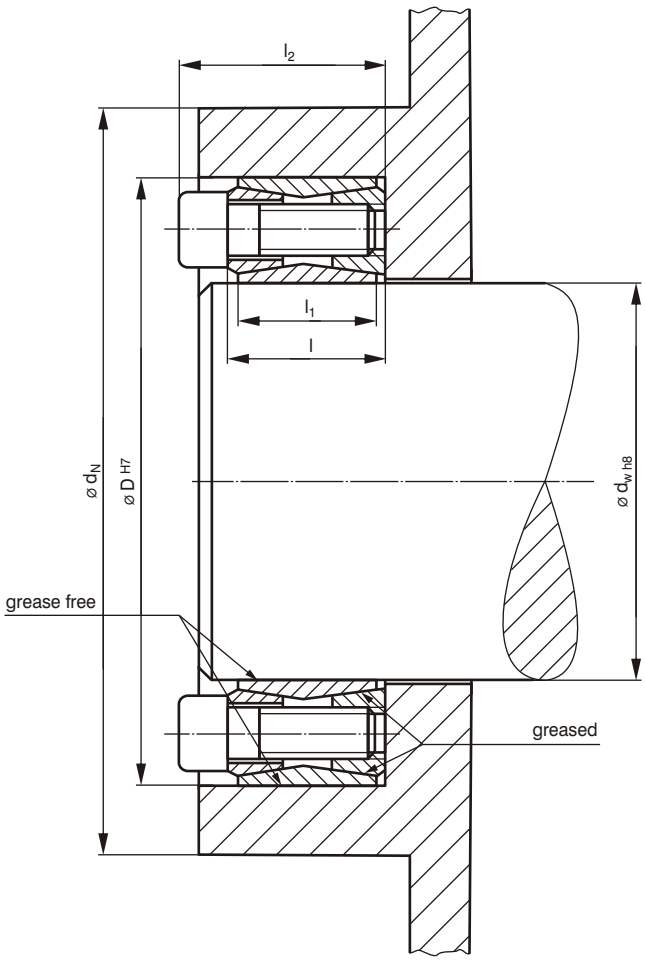


**Explanation:**

| | | |
|---|---|---|
| $\sigma_{0,2}$ | [N/mm²] | limit of elasticity of the hub material |
| $p_N$ | [N/mm²] | permitted surface pressure in the bore of the hub |
| C | [-] | factor for friction locking bush width e.g. C=1 when hub width = friction locking bush width and C=0,6 when hub width = 2x friction locking bush width |
| T | [Nm] | maximum transmissible torque for an Inkofix-tension set |
| $F_{ax}$ | [kN] | maximum axial force which may be applied to an Inkofix-tension set |
| $T_A$ | [Nm] | the required tightening torque for the tensioning screws |

## Ordering example:

Inkofix-tension set
Shafts diameter
External diameter

**ISH 100.145**

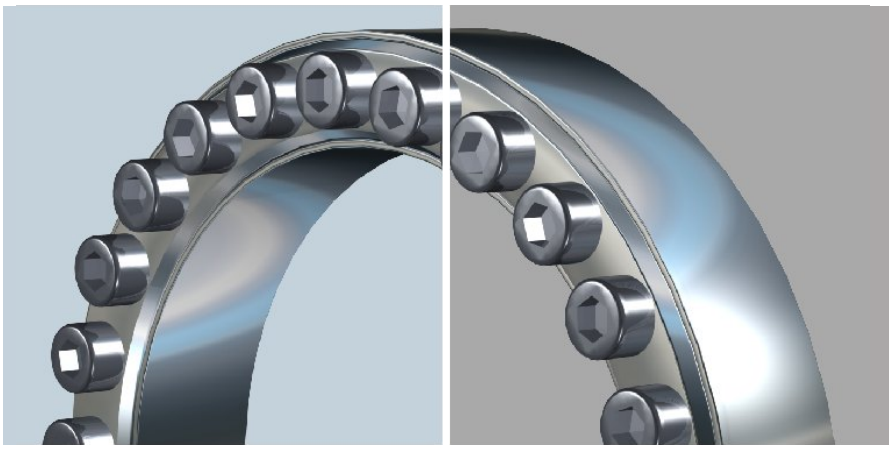

| Order code | Dimensions [mm] | | | | | Tension screw | | Operational data | | | | Mass |
|---|---|---|---|---|---|---|---|---|---|---|---|---|
| | | | | | | ISO 4762 (DIN 912) | Tightening torque | Torque | max. axial force | Surface pressure between friction locking bush and | | |
| | | | | | | | | | | Shaft | Hub | |
| | $d_w$ | D | l | $l_1$ | $l_2$ | | $T_A$ [Nm] | T [Nm] | $F_{ax}$ [kN] | $p_W$ [N/mm²] | $p_N$ [N/mm²] | [kg] |
| ISH 20.47 | 20 | 47 | 20 | 17 | 26 | M6 | 14 | 320 | 32 | 250 | 110 | 0,24 |
| ISH 22.47 | 22 | 47 | 20 | 17 | 26 | M6 | 14 | 340 | 32 | 220 | 110 | 0,23 |
| ISH 24.50 | 24 | 50 | 20 | 17 | 26 | M6 | 14 | 420 | 35 | 230 | 110 | 0,26 |
| ISH 25.50 | 25 | 50 | 20 | 17 | 26 | M6 | 14 | 440 | 35 | 220 | 110 | 0,25 |
| ISH 28.55 | 28 | 55 | 20 | 17 | 26 | M6 | 14 | 550 | 39 | 220 | 105 | 0,30 |
| ISH 30.55 | 30 | 55 | 20 | 17 | 26 | M6 | 14 | 590 | 39 | 210 | 110 | 0,29 |
| ISH 32.60 | 32 | 60 | 20 | 17 | 26 | M6 | 14 | 780 | 47 | 210 | 120 | 0,34 |
| ISH 35.60 | 35 | 60 | 20 | 17 | 26 | M6 | 14 | 830 | 47 | 210 | 120 | 0,32 |
| ISH 38.65 | 38 | 65 | 20 | 17 | 26 | M6 | 14 | 1000 | 55 | 220 | 130 | 0,36 |
| ISH 40.65 | 40 | 65 | 20 | 17 | 26 | M6 | 14 | 1100 | 55 | 210 | 130 | 0,34 |
| ISH 42.75 | 42 | 75 | 24 | 20 | 32 | M8 | 35 | 1850 | 87 | 270 | 160 | 0,60 |
| ISH 45.75 | 45 | 75 | 24 | 20 | 32 | M8 | 35 | 1950 | 87 | 260 | 160 | 0,57 |
| ISH 48.80 | 48 | 80 | 24 | 20 | 32 | M8 | 35 | 2100 | 87 | 230 | 150 | 0,62 |
| ISH 50.80 | 50 | 80 | 24 | 20 | 32 | M8 | 35 | 2100 | 87 | 230 | 150 | 0,60 |
| ISH 55.85 | 55 | 85 | 24 | 20 | 32 | M8 | 35 | 2800 | 100 | 250 | 160 | 0,63 |
| ISH 60.90 | 60 | 90 | 24 | 20 | 32 | M8 | 35 | 3000 | 100 | 230 | 150 | 0,69 |
| ISH 65.95 | 65 | 95 | 24 | 20 | 32 | M8 | 35 | 3800 | 115 | 240 | 160 | 0,73 |
| ISH 70.110 | 70 | 110 | 28 | 24 | 38 | M10 | 70 | 5600 | 160 | 260 | 160 | 1,26 |
| ISH 75.115 | 75 | 115 | 28 | 24 | 38 | M10 | 70 | 6100 | 160 | 250 | 150 | 1,33 |
| ISH 80.120 | 80 | 120 | 28 | 24 | 38 | M10 | 70 | 6500 | 160 | 230 | 150 | 1,40 |
| ISH 85.125 | 85 | 125 | 28 | 24 | 38 | M10 | 70 | 7900 | 180 | 240 | 160 | 1,49 |
| ISH 90.130 | 90 | 130 | 28 | 24 | 38 | M10 | 70 | 8300 | 180 | 230 | 160 | 1,53 |
| ISH 95.135 | 95 | 135 | 28 | 24 | 38 | M10 | 70 | 9900 | 200 | 240 | 170 | 1,62 |
| ISH 100.145 | 100 | 145 | 33 | 26 | 45 | M12 | 125 | 11900 | 230 | 240 | 170 | 2,01 |
| ISH 110.155 | 110 | 155 | 33 | 26 | 45 | M12 | 125 | 13000 | 230 | 220 | 160 | 2,15 |
| ISH 120.165 | 120 | 165 | 33 | 26 | 45 | M12 | 125 | 16300 | 270 | 230 | 170 | 2,35 |
| ISH 130.180 | 130 | 180 | 38 | 34 | 50 | M12 | 125 | 22000 | 340 | 200 | 150 | 3,51 |
| ISH 140.190 | 140 | 190 | 38 | 34 | 50 | M12 | 125 | 26000 | 370 | 210 | 150 | 3,85 |
| ISH 150.200 | 150 | 200 | 38 | 34 | 50 | M12 | 125 | 30500 | 400 | 210 | 160 | 4,07 |
| ISH 160.210 | 160 | 210 | 38 | 34 | 50 | M12 | 125 | 35000 | 440 | 220 | 160 | 4,30 |
| ISH 170.225 | 170 | 225 | 44 | 38 | 58 | M14 | 190 | 43500 | 510 | 210 | 160 | 5,78 |
| ISH 180.235 | 180 | 235 | 44 | 38 | 58 | M14 | 190 | 50000 | 550 | 220 | 170 | 6,05 |
| ISH 190.250 | 190 | 250 | 52 | 46 | 66 | M14 | 190 | 62000 | 650 | 200 | 150 | 8,25 |
| ISH 200.260 | 200 | 260 | 52 | 46 | 66 | M14 | 190 | 70000 | 700 | 200 | 160 | 8,65 |

Other sizes available, please enquire.

# Application examples

## Inkofix - friction locking bushes ISC, ISR, ISS, ISP, ISK, ISB and ISH

The INKOMA-Inkofix-friction locking bushes ISC are self centering universal friction locking bushes for keyless shaft-hub connection. They are supplied in two versions (A and B).

ISC/K-A and ISC/K-B see page 392 - 393
ISC/L-A and ISC/L-B see page 394 - 395

ISC-A

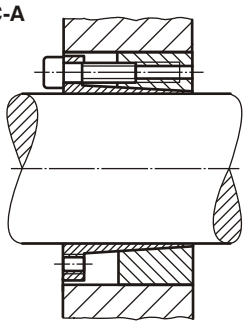

ISC-B

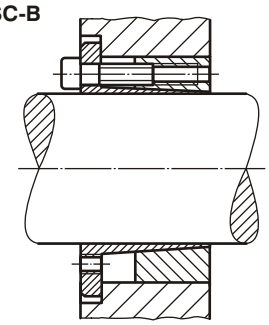

Inkofix-shrink ring ISR and Inkofix-shrink disc ISS are for friction-locked shaft-hub connection.

ISR see page 396 - 397
ISS see page 398 - 399

ISR

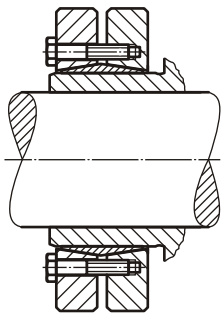

ISS

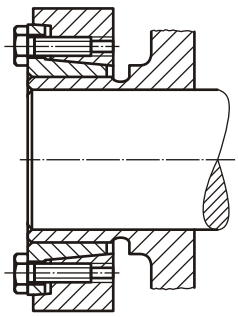

Inkofix-tension flanges ISP are primarily intended for use with our PK, Lineflex and Inkoflex couplings.

ISP see page 400 - 401

ISP

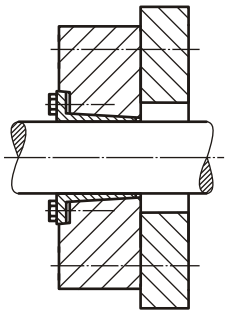

Inkofix-shrink couplings ISK are for the rigid keyless coupling of shafts with the same or similar diameters.

ISK see page 402 - 403

ISK

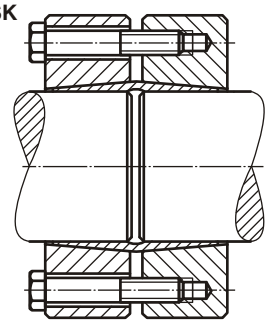

Inkofix-tension bushes ISB transmit high torques with precise concentricity.
Inkofix-tension bushes ISH transmit moderate torque with normal concentricity.

ISB see page 404 - 405
ISH see page 406 - 407

ISB

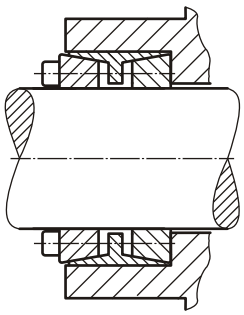

ISH