INKOMA - GROUP

Inkoflex couplings

INKOMA-GROUP

INKOMA-GROUP Headoffice
Sitz der INKOMA Maschinenbau GmbH
Neue Reihe 44
D - 38162 Schandelah - Germany

phone: +49/(0)5306-9221-0
fax: +49/(0)5306-9221-50
e-mail: info@inkoma.de
internet: www.INKOMA-GROUP.com

We reserve the right to make technical changes.
2014-1-MP-OE-e © INKOMA-GROUP

Product description

Inkoflex couplings IFK

The INKOMA-Inkoflex coupling is designed for the transmission of torque between two shafts where accuracy of alignment cannot be guaranteed, or where the alignment of the shafts can vary during operation.
The INKOMA-Inkoflex coupling compensates for both radial and angular misalignment of the shafts in operation, within the stated limiting values.

Features of the INKOMA-Inkoflex coupling:

- rigid connection of shafts with compensation of both radial and angular misalignments
- no loss of synchronicity
- dynamically balanced
- short installed length
- no radial loads on shaft support bearings
- compensates for considerable radial offset and up to 5° of angular offset
- maintenance free
- all-steel construction

Patents for the INKOMA-Inkoflex coupling have been applied for in all industrialised European countries
This brochure contains all necessary information for the selection, installation and operation of the standard range of INKOMA-Inkoflex couplings.
Special sizes and designs are possible. Please enquire.

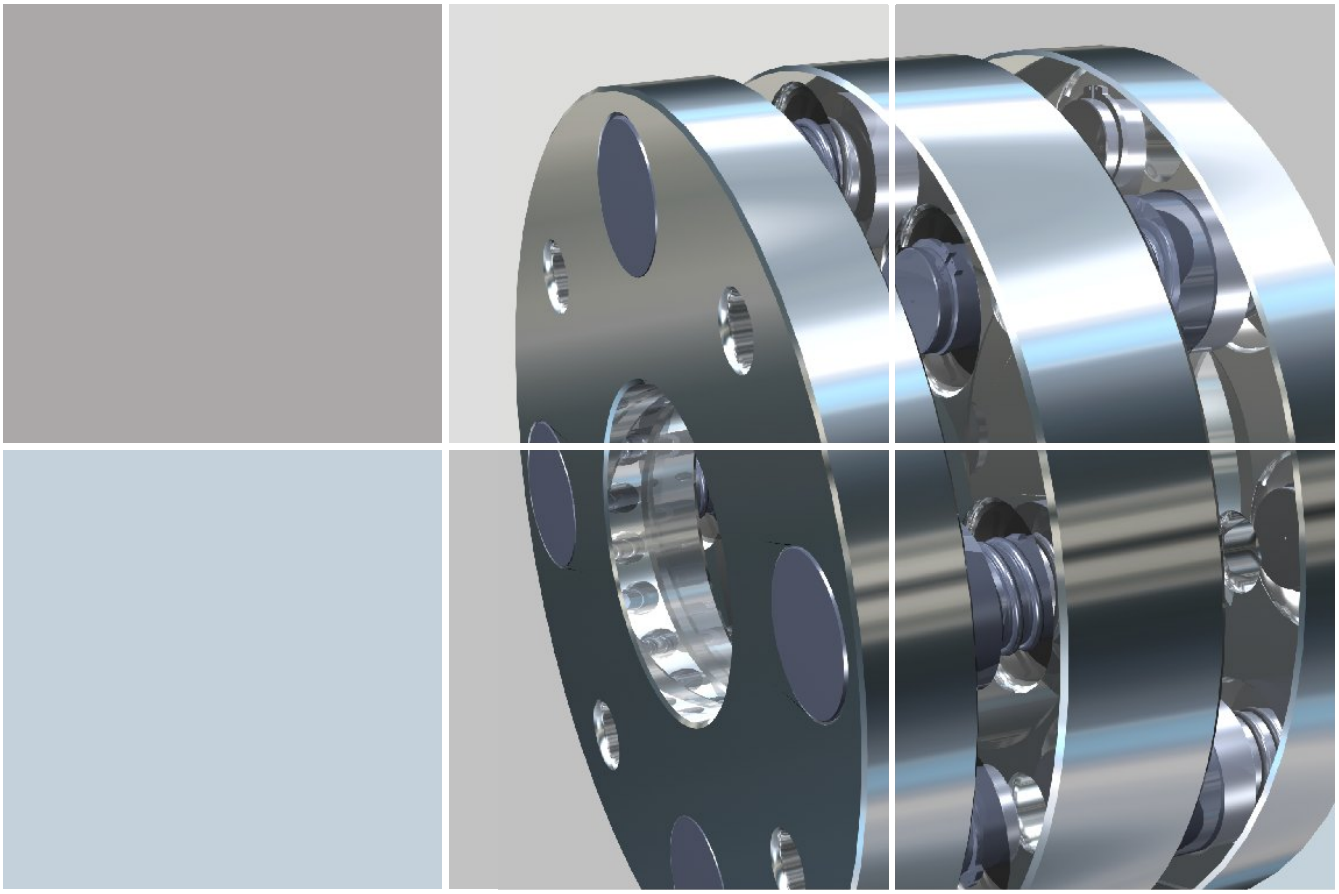

Contents list

Inkoflex couplings IFK

Technical information page 301

versions A1, A2, A3, A4, A5, A6, A7

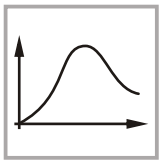

Calculations page 302 - 303

theoretical expected life
permissible torque

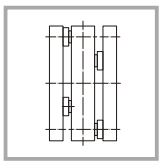

Dimensions IFK 42 to IFK 340 page 304 - 307

Inkoflex coupling IFK (A1, A2, A3, A4, A5, A6, A7)

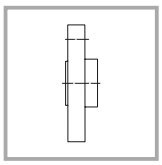

Dimensions for GFL - separable flange page 308 - 309

for versions A4 and A6

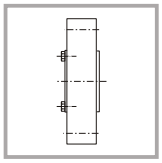

Dimensions for ISP-C - Inkofix tension flange page 310 - 311

for version A3

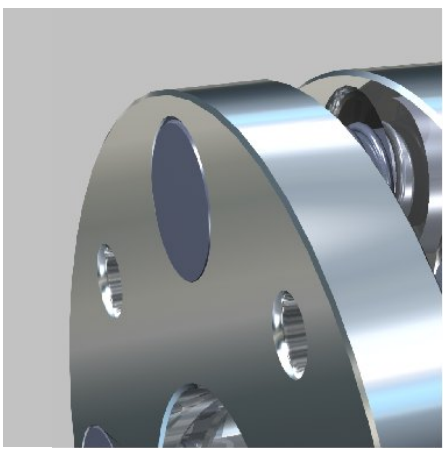
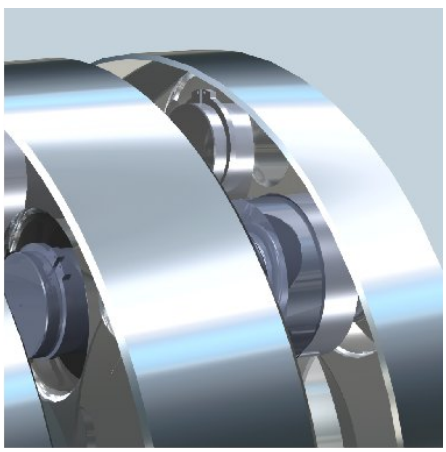

Technical information

Inkoflex couplings IFK

INKOMA-Inkoflex coupling IFK is available in the following versions:

A1 = Basic version:
Both outer discs have tapped holes for connecting components. The number of tapped holes on pitch circle "C":

3 flexing drive module = 3 × 120°
4 flexing drive module = 4 × 90°
5 flexing drive module = 5 × 72°
6 flexing drive module = 6 × 60°

A2 = Hub version:
Both outer discs have finished bores in outward facing hubs.

A3 = Tension hub version:
Basic version A1 with additional shrink disc. The shrink disc allows keyless fitting to the shaft.
For details of the tension flange see page 310.

A4 = Separable hub version:
Basic version A1 with additional adaptor flanges. These flanges have hubs for shaft fitting.
For details of separable flanges see page 308.

A5 = Hub version with inward facing integral hubs:
Both outer discs have finished bores in inward facing hubs. The axial length is the same as basic version A1 - A1.

A6 = Separable hub version with inward facing integral hubs:
Basic version A1 with additional inward facing adaptor flanges.
For details of separable flanges see page 308.

A7 = Split hub version:
This hub version has two components - a fixed and a removable part allowing radial clamping to the shaft. This version requires no axial displacement of the shaft for assembly and disassembly.

Combinations:
Each coupling can combine any of these versions. E.g. A1/A2 - one disc with tapped holes and the other with outward facing bored hub. All versions may be combined with one another, e.g. A3/A4, A1/A4, A2/A3, etc.

Special versions:
In addition to basic versions, customer specific executions are also possible e.g. incorporating sprocket, gears, shaft, etc. in the outer discs.

Applications for INKOMA-Inkoflex couplings:
INKOMA-Inkoflex couplings are widely used to compensate for misalignment.
They are widely used where two shafts have relatively small deviations from correct alignment (radial up to 1 mm and angular up to 5°) and torsional stiffness is essential.
Inaccuracies result from manufacturing and assembly tolerances. By using INKOMA-Inkoflex couplings wider tolerances can be accepted and the manufacturing cost reduced.
Deviations can also result during operation, if for example two rollers need minute adjustment in respect of each other.

Notes for installation and operation
Axial length "A" is the assembly dimension for the coupling. The tolerances for this dimension are dependent on the coupling size as shown:

for coupling type	IFK 42, 64... and IFK 78...	± 0,5mm
	IFK 104... and IFK 124...	± 1,0mm
	IFK 146...	± 1,5mm
	IFK 220... and IFK 340...	± 2,5mm

In addition the assembly dimensions for the PK coupling must be observed (see category "PK couplings").

The dimension "W" listed in the brochure and dimensions for keyways are preferred dimensions.
Couplings having other bore dimensions are available. Please enquire.

INKOMA-Inkoflex couplings transmit only torque and can carry no axial load component. I.e. Any axial load element must be compensated for in the design.
INKOMA-Inkoflex couplings are lubricated for life. Under normal operational and environmental conditions no further lubrication should be necessary.

When installing INKOMA-Inkoflex coupling IFK version A3 (Tension hub version) the installation must be carried out according to the following procedure:
1. Position the components
2. Assemble the tension flange to the shaft
3. Fix the tension flange to the coupling end disc

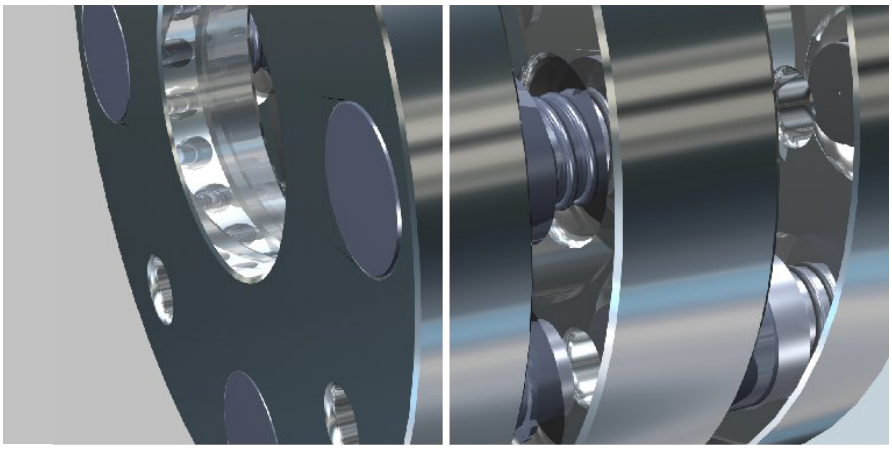

Calculations

Inkoflex couplings IFK

The theoretical expected life L_h [h] and the permissible torque T_{per} [Nm] depend on the angular misalignment α [°], the speed n [1/min] and the load factor [-]. The relevant factor can be found in the adjacent diagram and table. The input torque T_{kN} [Nm] should always be less than the permissible torque $T_{per.}$ [Nm].

Nominal input torque:

$$T_{kN}\,[Nm] = \frac{P_A\,[kW]}{n_A\,[1/min]}$$

Theoretical expected life:

Couplings should be fitted with a protective sleeve. This sleeve serves to avoid the loss of lubricant and to prevent the ingress of dust and other contamination to the INKOMA-Inkoflex coupling.

Theoretical expected life:

$$L_h\,[h] = 30000h \bullet f_\alpha{}^2\,[-] \bullet f_R{}^2\,[-] \bullet f_n{}^2\,[-]$$

Permissible torque:

$$T_{per.}\,[Nm] = T_{kN}\,[Nm] \bullet K\,[-] \bullet f_\alpha\,[-] \bullet f_R\,[-] \bullet f_n\,[-]$$

Load factor	K
no shock	1,0
moderate shock	1,8
heavy shock	2,5
heavy reversing shock	3,0

Factor for the applied angular misalignment f_α [-]

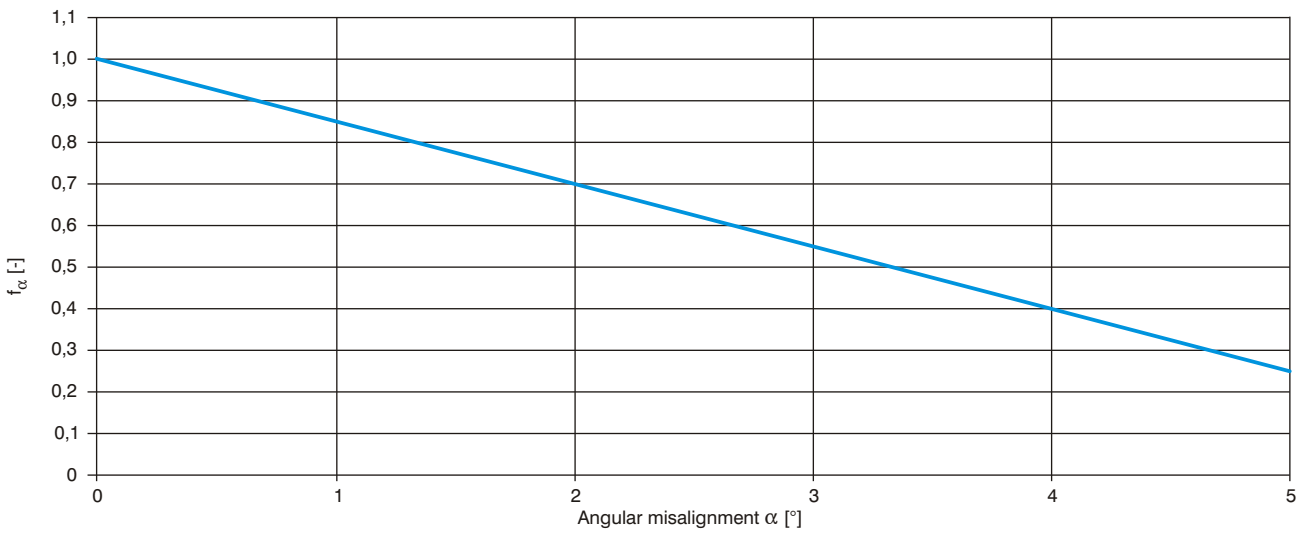

Factor for the applied radial offset f_R [-]

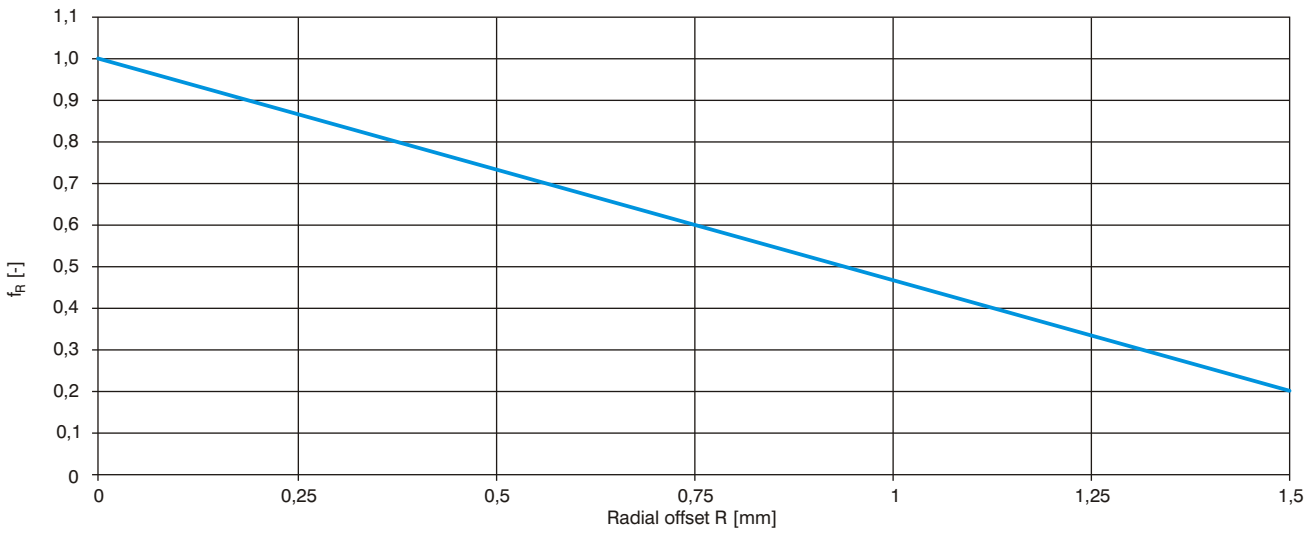

Calculations

Inkoflex couplings IFK

Speed factor f_n [-]

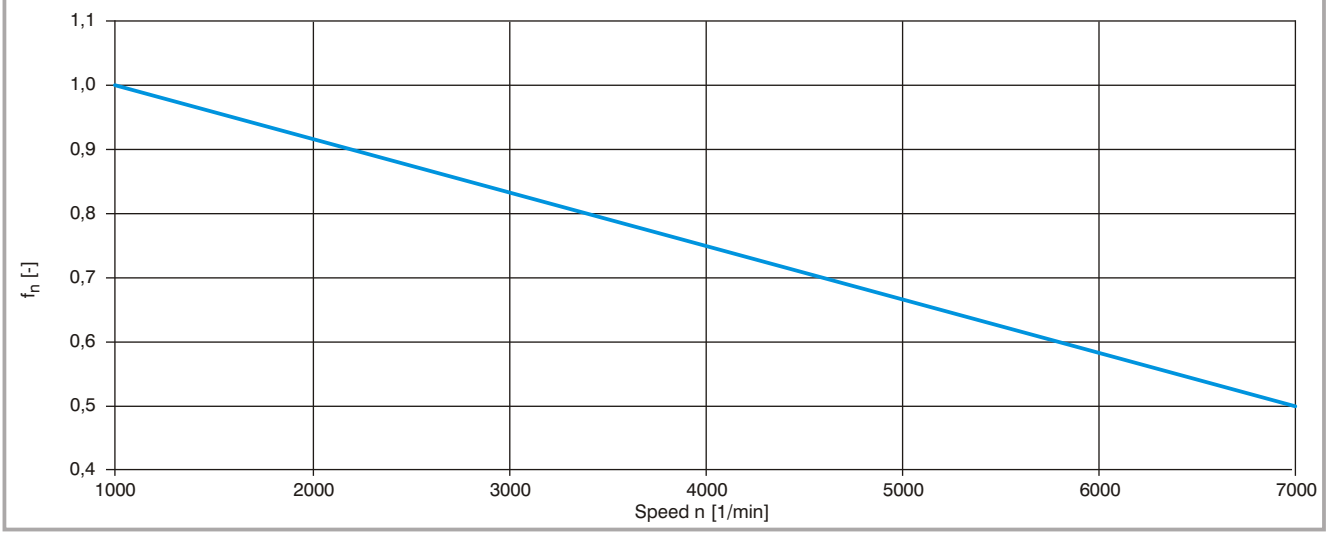

Torsional stiffness of IFK coupling for the standard range (empirically derived values), pre-load 10Nm to eliminate backlash

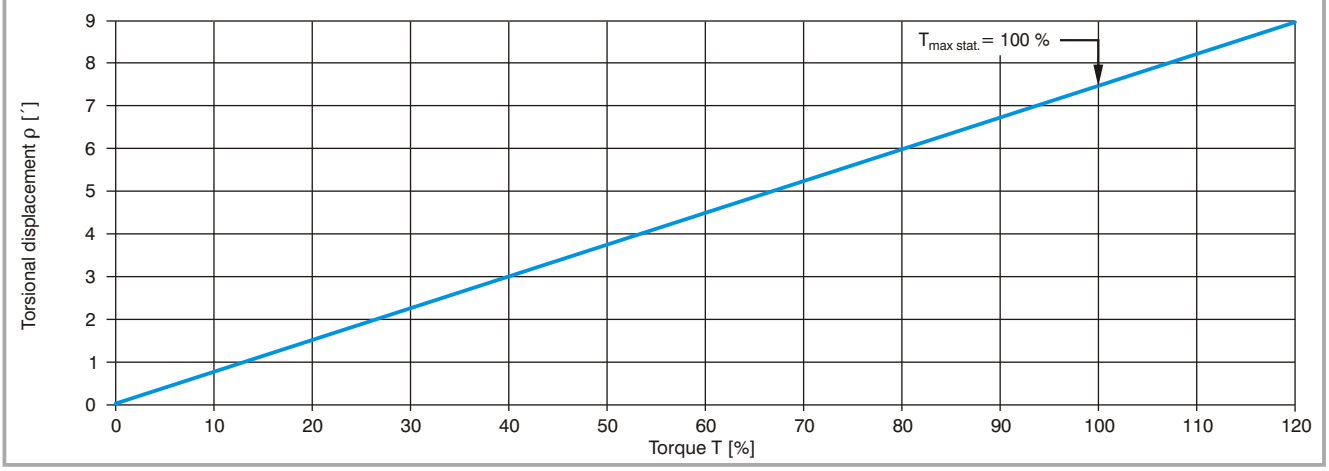

Example:

IFK 104.140/4

$T_{stat.}$ = 2600 Nm

T_{kN} = 795,8 Nm

$$T\,[\%] = 100\ \% \frac{T_{kN}}{T_{stat.}}$$

$$T\,[\%] = 100\ \% \frac{795{,}8\ Nm}{2600\ Nm} = 30{,}6\ \% \longrightarrow \text{Torsional displacement } \rho = 2{,}2'$$

Explanation:

$T_{stat.}$	[Nm]	max. static torque
T_{kN}	[Nm]	nominal input torque
T	[%]	torque in %
$T_{zul.}$	[Nm]	permissible torque

P_A	[kW]	input power at the coupling
n_A	[1/min]	input speed
L_h	[h]	required life
K	[-]	load factor

Dimensions IFK 42 to IFK 340

Inkoflex coupling IFK (A1, A2, A3)

INKOMA-Inkoflex coupling IFK is normally available in the versions:

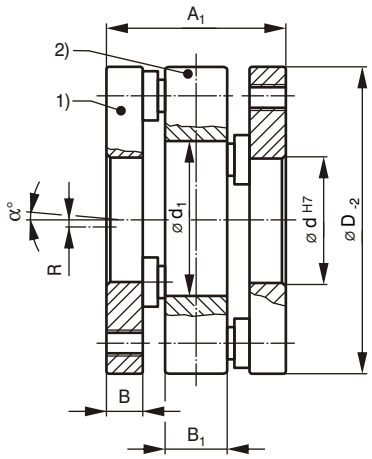

A1 A1

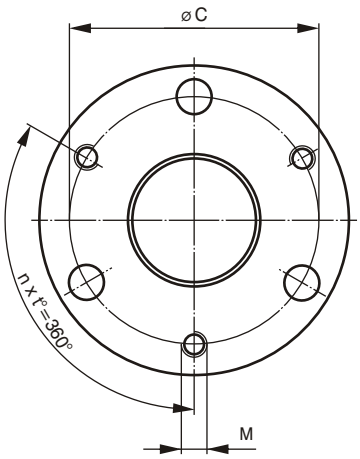

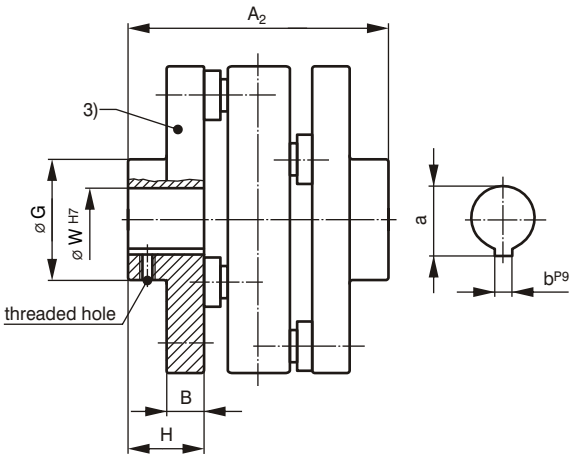

A2 A2

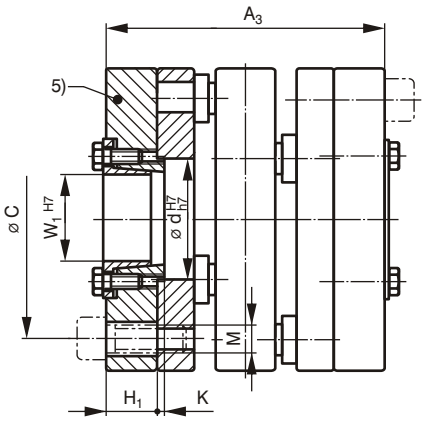

A3 A3

A3 = A1 + ISP-C

For further details see page 310 tension flange.

Ordering example:

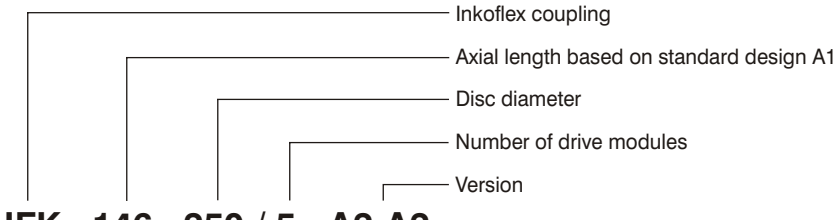

IFK 146 . 250 / 5 - A2-A2

Dimensions IFK 42 to IFK 340

Inkoflex coupling IFK (A4, A5, A6, A7)

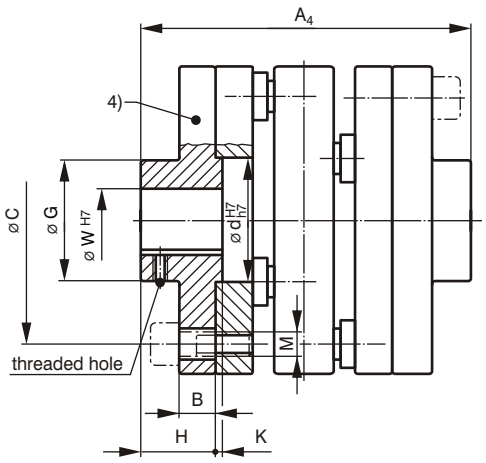

A4 A4

A4= A1+GFL

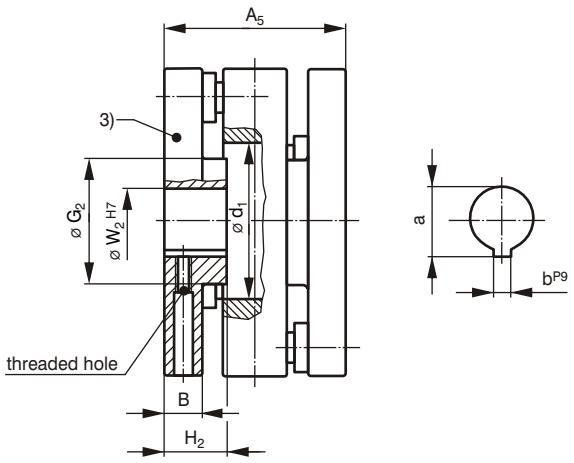

A5 A5

For missing dimensions and designations for GFL see page 308.

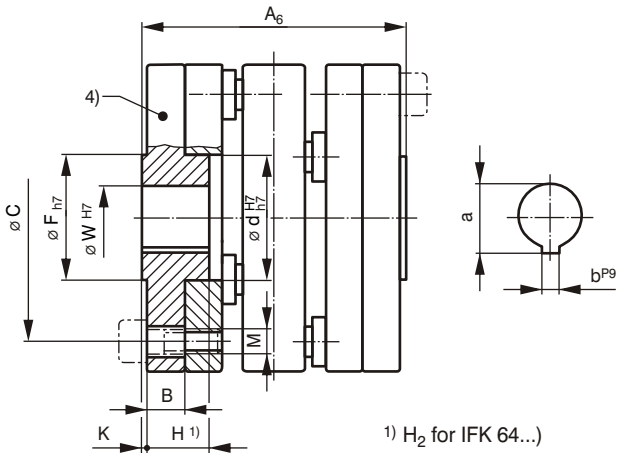

1) H_2 for IFK 64...)

A6 A6

A6= A1+GFL

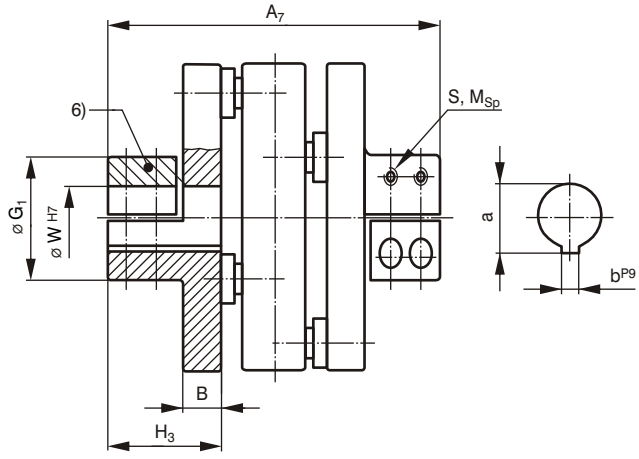

A7 A7

For missing dimensions and designations for GFL see page 308.

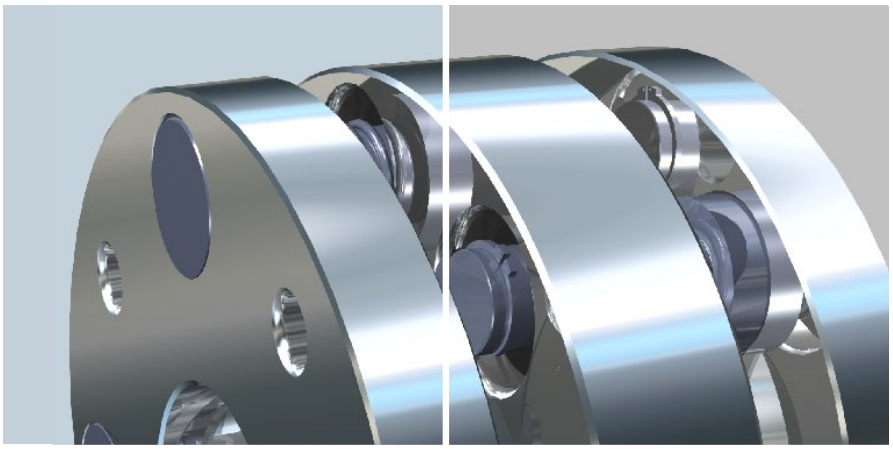

Explanation:

1) outer disc

2) centre disc

3) outer disc with integral hub

4) separable flange with hub

5) outer disc with tension flange

6) outer disc with split hub

Dimensions IFK 42 to IFK 340

Inkoflex coupling IFK (A1, A2, A3, A4, A5, A6, A7)

Order code	Dimensions [mm]																								
	A_1	A_2	A_3	A_4	A_5	A_6	A_7	B	B_1	C	D	G	G_1	G_2	H	H_1	H_2	H_3	K	W [1]	W_1 [1]	W_2 [1]	a	b	d	d_1 max.
IFK 42.50/3	42	66	[4]	82	42	62	74	8	15	35	52	28	46	16	20	12	20	24	2	14	[4]	10 [2]	16,3	5	22	19
IFK 42.70/4	42	66	66	82	42	62	92	8	15	56	72	35	40	33	20	12	20	33	2	16	16	16	18,3	5	25	36
IFK 64.70/3	64	83	[4]	104	64	89	114	10,5	20	48	72	35	37,5	20	20	14	20	35,5	2	16	16	12 [2]	18,3	5	25	24
IFK 64.90/4	64	117	92	138	64	91	124	10,5	20	70	93	55	50	40	37	14	30	40,5	3	25	25	25	28,3	8	45	45
IFK 64.120/4	64	127	96	148	64	91	134	10,5	20	98	122	60	60	55	42	16	30	45,5	3	30	30	30	33,3	8	50	70
IFK 78.120/4	78	131	128	162	78	115	158	16	22	90	120	65	65	60	42	25	37	56	3	30	30	30	33,3	8	50	65
IFK 78.140/4	78	151	138	182	78	115	168	16	22	110	140	70	70	65	52	30	37	61	3	35	35	35	38,3	10	55	70
IFK 78.160/4	78	151	138	182	78	115	178	16	22	130	160	70	80	70	52	30	37	66	3	40	40	40	43,3	12	60	75
IFK 104.140/4	104	163	174	208	104	155	204	22,5	30	100	140	70	75	55	52	35	49	72,5	3	35	35	35	38,3	10	55	60
IFK 104.160/4	104	163	174	208	104	155	214	22,5	30	120	160	85	80	75	52	35	49	77,5	3	40	40	40	43,3	12	60	80
IFK 124.160/4	124	178	204	228	124	180	234	25	40	115	160	75	90	65	52	40	52	80	3	40	40	40	43,3	12	60	70
IFK 124.180/4	124	198	214	248	124	180	244	25	40	135	180	90	100	70	62	45	58	85	3	45	45	45	48,8	14	70	80
IFK 124.200/4	124	218	224	268	124	180	244	25	40	152	200	100	100	80	72	50	58	85	3	50	50	50	53,8	14	80	90
IFK 146.200/4	146	226	266	286	146	216	[3]	30	50	150	200	100	[3]	80	70	60	68	[3]	5	50	50	50	53,8	14	80	90
IFK 146.200/5	146	226	266	286	146	216	[3]	30	50	150	200	100	[3]	80	70	60	68	[3]	5	50	50	50	53,8	14	80	90
IFK 146.250/4	146	246	286	306	146	216	[3]	30	50	200	250	120	[3]	115	80	70	68	[3]	5	60	60	60	64,4	18	100	125
IFK 146.250/5	146	246	286	306	146	216	[3]	30	50	200	250	120	[3]	115	80	70	68	[3]	5	60	60	60	64,4	18	100	125
IFK 146.250/6	146	246	286	306	146	216	[3]	30	50	200	250	120	[3]	115	80	70	68	[3]	5	60	60	60	64,4	18	100	125
IFK 146.310/5	146	276	296	336	146	216	[3]	30	50	260	310	160	[3]	160	95	75	75	[3]	5	80	80	80	85,4	22	150	180
IFK 146.310/6	146	276	296	336	146	216	[3]	30	50	260	310	160	[3]	160	95	75	75	[3]	5	80	80	80	85,4	22	150	180
IFK 146.310/8	146	276	296	336	146	216	[3]	30	50	260	310	160	[3]	160	95	75	75	[3]	5	80	80	80	85,4	22	150	180
IFK 220.350/4	220	354	[3]	450	220	326	[3]	48	[3]	272	350	180	[3]	[3]	115	[3]	[3]	[3]	5	80	80	80	85,4	22	180	[3]
IFK 220.350/5	220	354	[3]	450	220	326	[3]	48	[3]	272	350	180	[3]	[3]	115	[3]	[3]	[3]	5	80	80	80	85,4	22	180	[3]
IFK 220.400/5	220	394	[3]	490	220	326	[3]	48	[3]	320	400	200	[3]	[3]	135	[3]	[3]	[3]	5	80	80	80	85,4	22	200	[3]
IFK 220.400/6	220	394	[3]	490	220	326	[3]	48	[3]	320	400	200	[3]	[3]	135	[3]	[3]	[3]	5	80	80	80	85,4	22	200	[3]
IFK 340.480/4	340	[3]	[3]	[3]	340	[3]	[3]	80	[3]	350	480	[3]	[3]	[3]	[3]	[3]	[3]	[3]	[3]	[3]	[3]	[3]	[3]	[3]	[3]	[3]
IFK 340.560/4	340	[3]	[3]	[3]	340	[3]	[3]	80	[3]	432	560	[3]	[3]	[3]	[3]	[3]	[3]	[3]	[3]	[3]	[3]	[3]	[3]	[3]	[3]	[3]
IFK 340.560/5	340	[3]	[3]	[3]	340	[3]	[3]	80	[3]	432	560	[3]	[3]	[3]	[3]	[3]	[3]	[3]	[3]	[3]	[3]	[3]	[3]	[3]	[3]	[3]
IFK 340.620/6	340	[3]	[3]	[3]	340	[3]	[3]	80	[3]	490	620	[3]	[3]	[3]	[3]	[3]	[3]	[3]	[3]	[3]	[3]	[3]	[3]	[3]	[3]	[3]

[1] preferred bore dimension, also available in other diameters
[2] keyway to BS 4235 (DIN 6885/1)
[3] hub length, diameter, bore to customer's specification
[4] version A3 cannot be supplied

For special sizes please enquire.

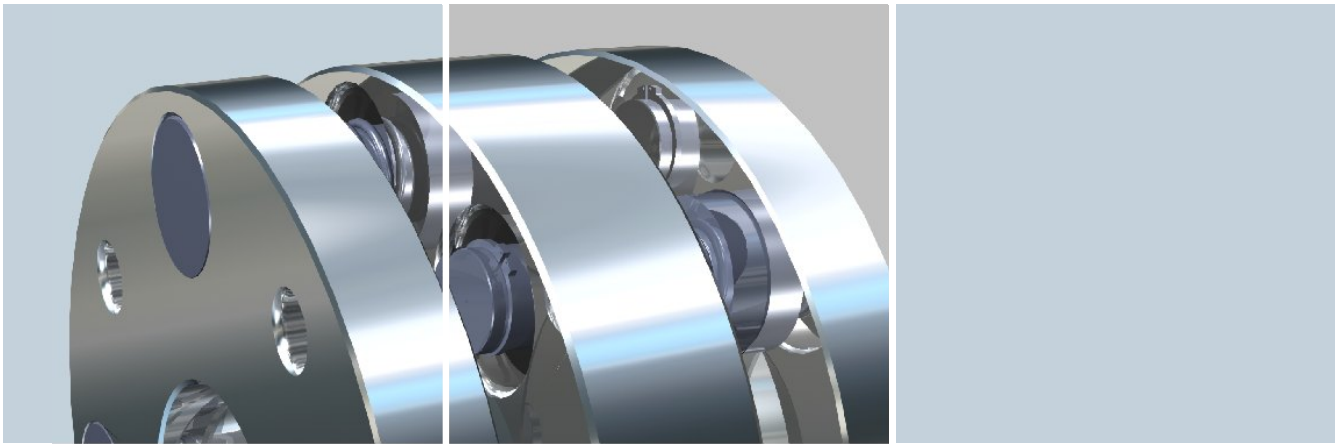

Operational data IFK 42 to IFK 340

Inkoflex coupling IFK (A1, A2, A3, A4, A5, A6, A7)

Order code	Mounting holes			Clamping screws A7		Operational data						Mass [6]
	Thread	Number	Hole pitch		Tightening torque	Radial offset	Angular misalignment	Power	Torque	Mass moment of inertia [6]	max. speed [5]	
	M	n	t [°]	S	M_{Sp} [Nm]	R [±mm]	α [°]	$\frac{P}{n}$ $\left[\frac{kW}{1/min}\right]$	$T_{stat.}$ [Nm]	J [kg cm²]	n [1/min]	[kg]
IFK 42.50/3	M6	3	120	2xM5	6	0,5	5	0,008	66	3	3000	0,36
IFK 42.70/4	M6	4	90	4xM5	6	0,5	5	0,014	206	5	3000	0,64
IFK 64.70/3	M8	3	120	4xM5	6	0,5	5	0,026	252	13	3000	0,96
IFK 64.90/4	M8	4	90	4xM6	10,5	1	5	0,051	490	35	3000	1,44
IFK 64.120/4	M8	4	90	4xM8	25	1	5	0,071	686	118	2500	2,81
IFK 78.120/4	M12	4	90	4xM8	25	1	5	0,109	1044	218	2500	4,28
IFK 78.140/4	M12	4	90	4xM10	50	1	5	0,134	1275	324	2500	4,28
IFK 78.160/4	M12	4	90	4xM10	50	1	5	0,158	1508	562	2500	7,83
IFK 104.140/4	M16	4	90	4xM10	50	1	4	0,272	2600	402	2500	7,20
IFK 104.160/4	M16	4	90	4xM12	87	1	4	0,330	3120	679	2500	9,45
IFK 124.160/4	M16	4	90	4xM12	87	1	4	0,385	3680	778	2000	10,8
IFK 124.180/4	M16	4	90	4xM12	87	1	3	0,452	4320	1194	1800	12,8
IFK 124.200/4	M16	4	90	4xM12	87	1	3	0,509	4860	1927	1800	16,6
IFK 146.200/4	M20	4	90	[3]	[3]	1	3	0,628	6000	3037	1800	20,8
IFK 146.200/5	M20	5	72	[3]	[3]	1	3	0,785	7500	3037	1800	20,8
IFK 146.250/4	M20	4	90	[3]	[3]	1	3	0,837	8000	6296	1800	32,8
IFK 146.250/5	M20	5	72	[3]	[3]	1	3	1,047	10000	6296	1800	32,8
IFK 146.250/6	M20	6	60	[3]	[3]	1	3	1,256	12000	6296	1800	33,8
IFK 146.310/5	M20	5	72	[3]	[3]	1	3	1,361	13000	12585	1800	45,6
IFK 146.310/6	M20	6	60	[3]	[3]	1	3	1,633	15600	12585	1800	45,8
IFK 146.310/8	M20	8	45	[3]	[3]	1	3	2,170	20800	12585	1800	46,3
IFK 220.350/4	M20	4	90	[3]	[3]	1	2	1,983	19040	39456	1700	96,4
IFK 220.350/5	M20	5	72	[3]	[3]	1	2	2,492	23800	39456	1700	96,4
IFK 220.400/5	M20	5	72	[3]	[3]	1	2	3,518	33600	74542	1700	149,0
IFK 220.400/6	M20	6	60	[3]	[3]	1	2	4,617	44100	74542	1700	149,0
IFK 340.480/4	[3]	4	90	[3]	[3]	1	2	7,454	71225	211350	1000	316
IFK 340.560/4	[3]	4	90	[3]	[3]	1	2	9,158	87505	357240	1000	412
IFK 340.560/5	[3]	5	72	[3]	[3]	1	2	11,453	109384	357240	1000	412
IFK 340.620/6	[3]	6	60	[3]	[3]	1	2	15,547	148500	573088	1000	524

[3] hub length, diameter, bore to customer's specification

[5] for speeds in excess of 1500 1/min and according to version the couplings must be statically and dynamically balanced

[6] for version A1

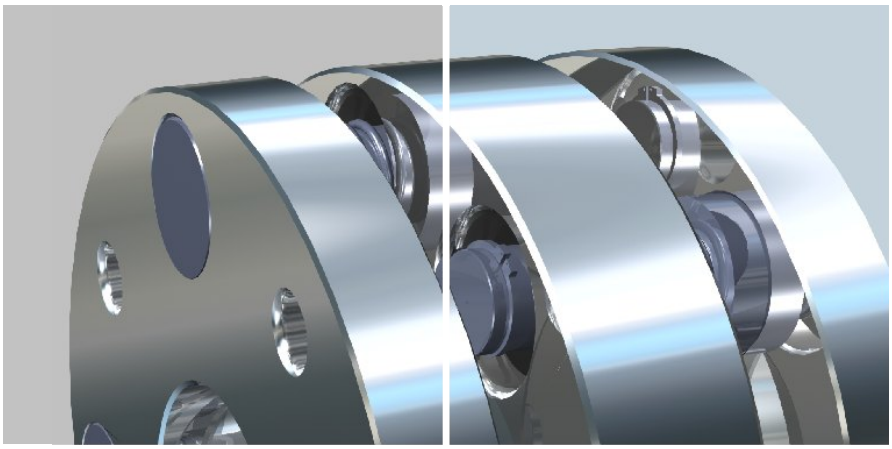

Dimensions for GFL

GFL - separable flanges

For versions A4 and A6.

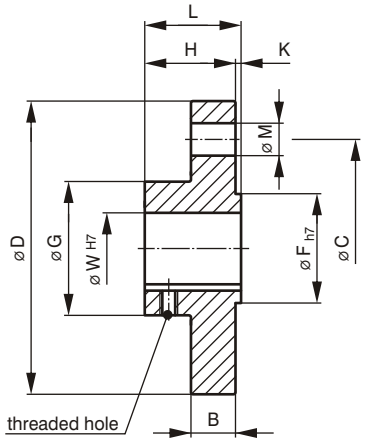

A4

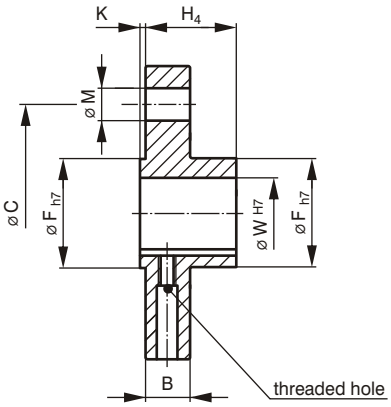

A6

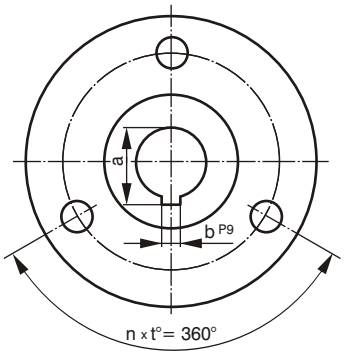

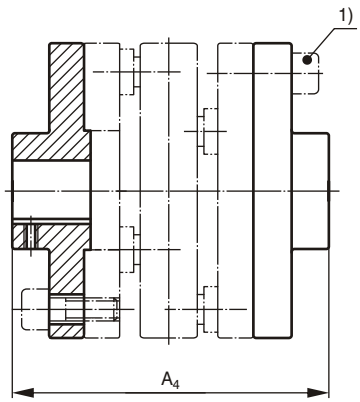

A4 A4

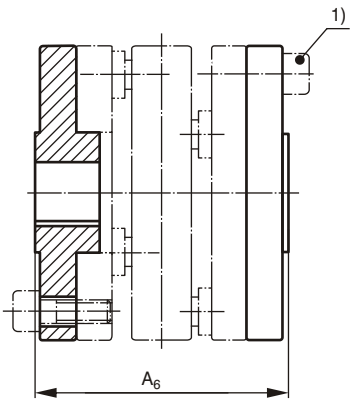

A6 A6

[1] Mounting screws are not supplied.

Ordering example:

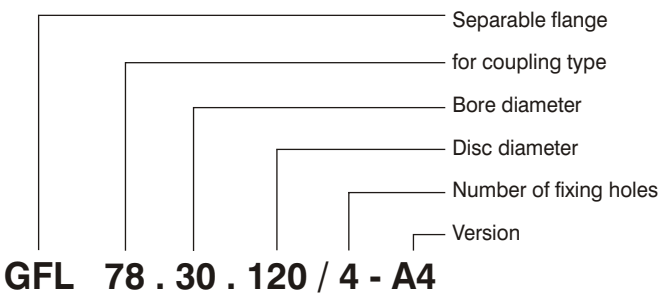

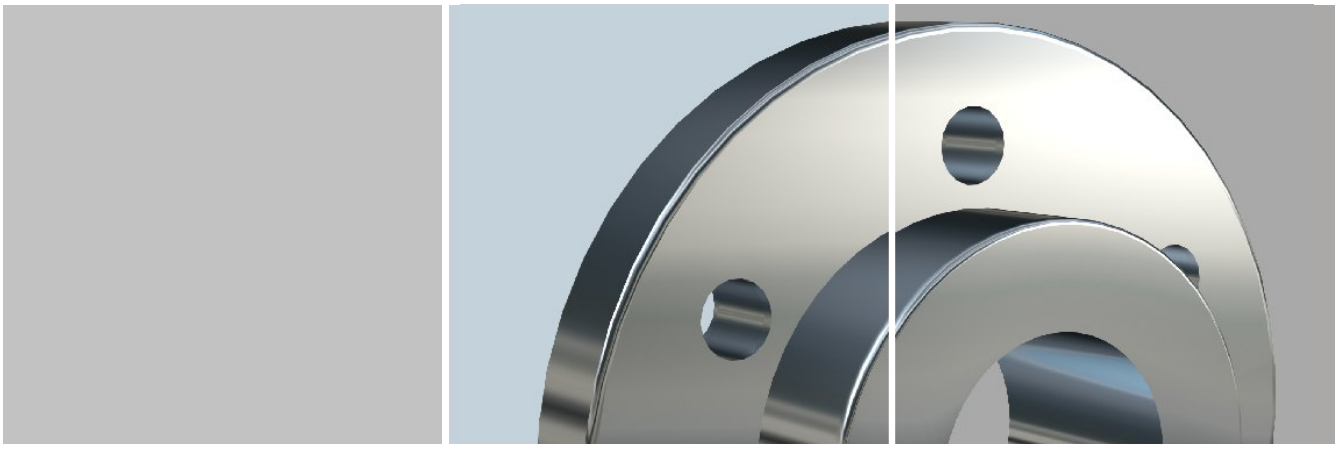

Order code	Dimensions [mm]														Mounting holes			Mass moment of inertia	Mass
	B	C	D	F	G	H	H_4	K	L	W 1)	$W_{max.}$ A4	$W_{max.}$ A6	a 2)	b 2)	Bore M [mm]	Number n	Hole pitch t [°]	J [kg cm²]	[kg]
GFL 42.14.50/3	8	35	50	22	24	20	20	2	22	14	14	14	16,3	5	6,6	3	120	5	0,16
GFL 42.16.70/4	8	56	70	25	35	20	20	2	22	16	22	16	18,3	5	6,6	4	90	8	0,22
GFL 64.16.70/3	10,5	48	70	25	35	20	20	2	22	16	22	16	18,3	5	9	3	120	10	0,38
GFL 64.25.90/4	10,5	70	90	45	55	37	30	3	40	25	40	33	28,3	8	9	4	90	30	0,68
GFL 64.30.120/4	10,5	98	120	50	60	42	30	3	45	30	45	38	33,3	8	9	4	90	80	1,1
GFL 78.30.120/4	15,5	90	120	50	65	42	42	3	45	30	45	38	33,3	8	14	4	90	114	1,5
GFL 78.35.140/4	15,5	110	140	55	70	52	52	3	55	35	50	40	38,3	10	14	4	90	208	2,0
GFL 78.40.160/4	15,5	130	160	60	70	52	52	3	55	40	55	45	43,3	12	14	4	90	345	2,57
GFL 104.35.140/4	22,5	100	140	55	70	52	52	3	55	35	50	40	38,3	10	18	4	90	290	2,78
GFL 104.40.160/4	22,5	120	160	60	85	52	52	3	55	40	55	45	43,3	12	18	4	90	495	3,64
GFL 124.40.160/4	25	115	160	60	75	52	52	3	55	40	55	45	43,3	12	18	4	90	495	3,97
GFL 124.45.180/4	25	135	180	70	90	62	62	3	65	45	60	53	48,8	14	18	4	90	875	5,1
GFL 124.50.200/4	25	125	200	80	100	72	72	3	75	50	70	65	53,8	14	18	4	90	1365	6,5
GFL 146.50.200/4	30	150	200	80	100	70	70	5	75	50	70	65	53,8	14	22	4	90	1595	7,5
GFL 146.50.200/5	30	150	200	80	100	70	70	5	75	50	70	65	53,8	14	22	5	72	1595	7,5
GFL 146.60.250/4	30	200	250	100	120	80	80	5	85	60	80	80	64,4	18	22	4	90	3985	12,3
GFL 146.60.250/5	30	200	250	100	120	80	80	5	85	60	80	80	64,4	18	22	5	72	3985	12,3
GFL 146.60.250/6	30	200	250	100	120	80	80	5	85	60	80	80	64,4	18	22	6	60	3985	12,3
GFL 146.80.310/5	30	260	310	150	160	95	95	5	100	80	100	100	85,4	22	22	5	72	13460	25,3
GFL 146.80.310/6	30	260	310	150	160	95	95	5	100	80	100	100	85,4	22	22	6	60	13460	25,3
GFL 146.80.310/8	30	260	310	150	160	95	95	5	100	80	100	100	85,4	22	22	8	45	13460	25,3
GFL 220.80.350/4	48	272	325	180	180	115	115	5	120	80	120	120	85,4	22	22	4	90	24060	38,2
GFL 220.80.350/5	48	272	325	180	180	115	115	5	120	80	120	120	85,4	22	22	5	72	24060	38,2
GFL 220.80.400/5	48	320	375	200	200	135	135	5	140	80	140	140	85,4	22	22	5	72	42590	51,6
GFL 220.80.400/6	48	320	375	200	200	135	135	5	140	80	140	140	85,4	22	22	6	60	42590	51,6

1) Dimension “W” for the bore is a preferred value.
2) Value for dimension “W”, in addition key to BS 4235 (DIN 6885/1)

Dimensions for ISP-C

ISP-C - Inkofix tension flange

For version A3.

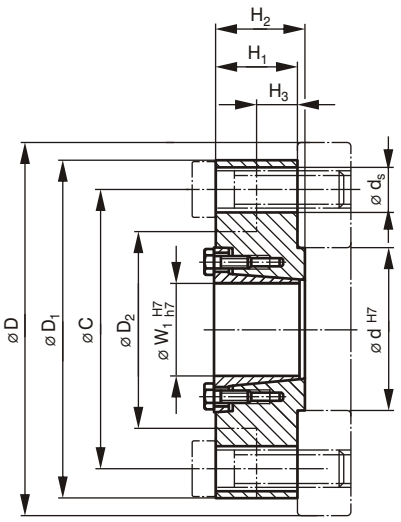

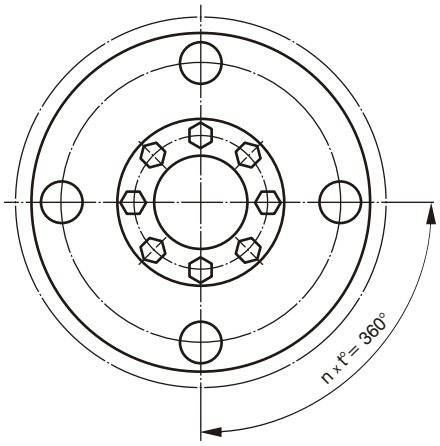

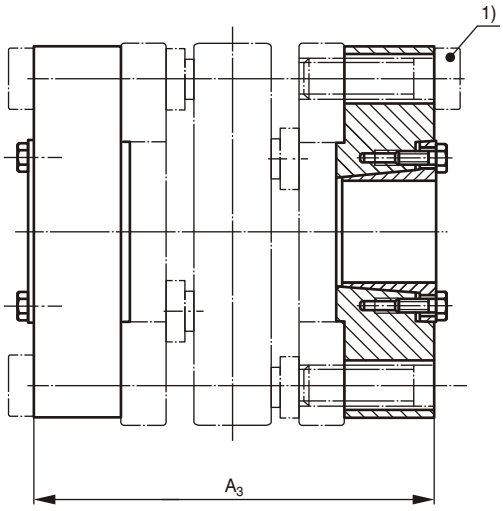

A3 A3

1) Mounting screws are not supplied.

Explanation:

$T_{stat.}$ = maximum transmissible torque for tension flange

F_{ax} = maximum transmissible axial force for tension flange

T_A = required tightening torque for the tension screws

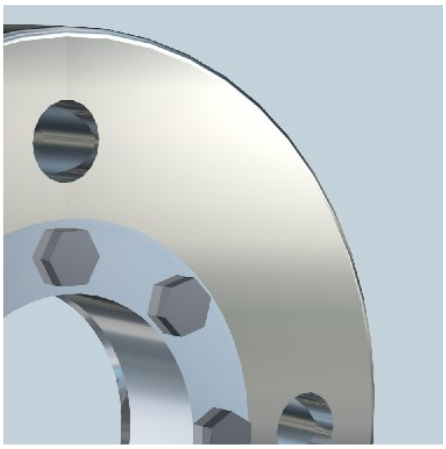

Ordering example:

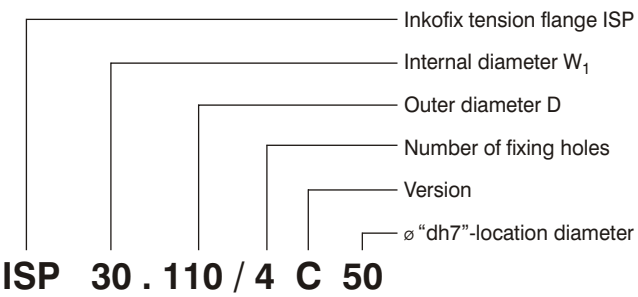

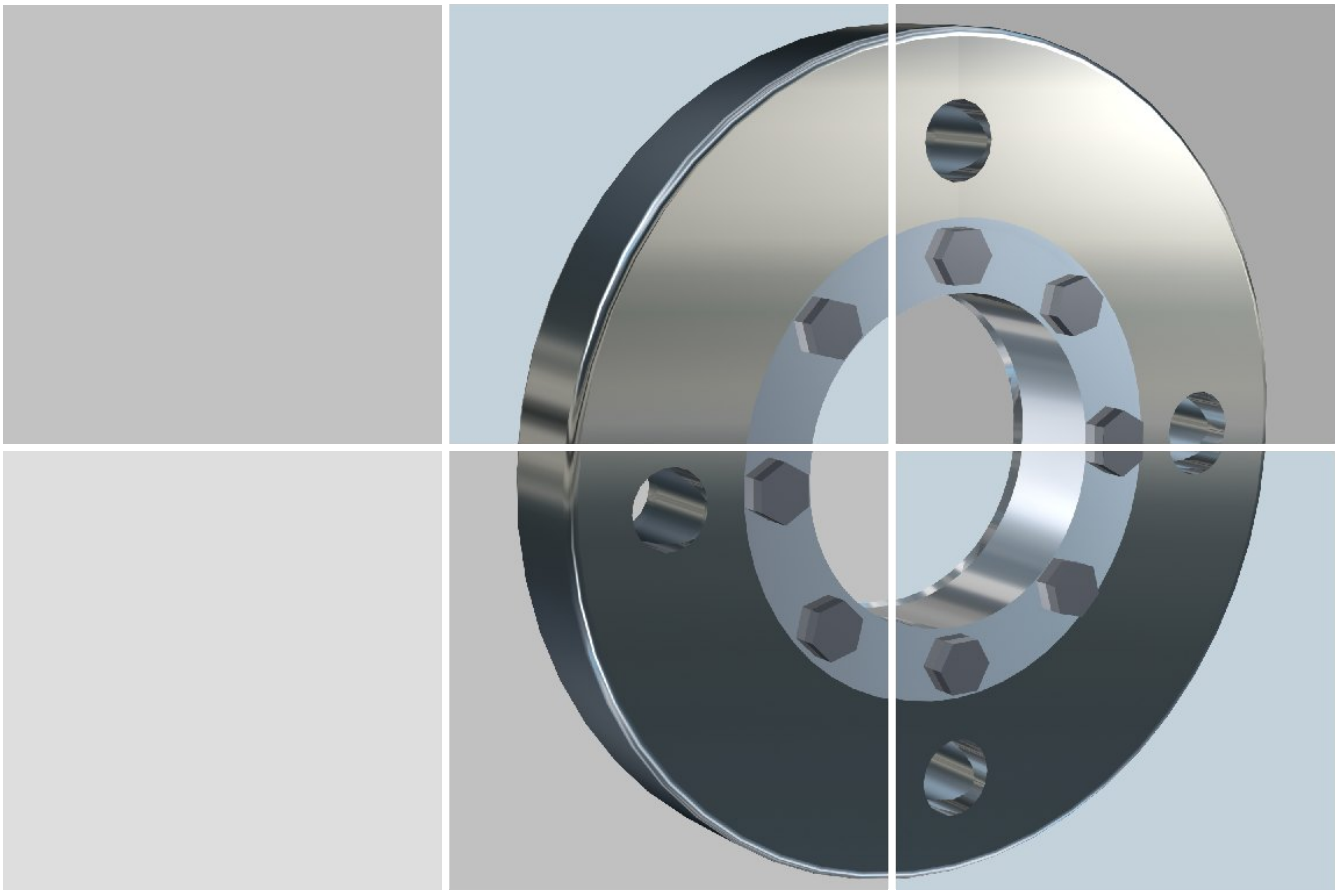

Order code Coupling	Order code Tension flange	Dimensions [mm]									Mounting holes			Tension screw		Operational data			Mass
		d	C	D	D_1	D_2	H_1	H_2	H_3	W_1 [1]	d_s	n	t [°]	ISO 4017 (DIN 933) 10.9	Tightening torque T_A [Nm]	Torque $T_{stat.}$ [Nm]	max. axial force F_{ax} [kN]	Mass moment of inertia J [kg cm²]	[kg]
IFK 42.70/4	ISP 16.66/4C25	25	56	72	66	-	12	14	-	16	6,6	4	90	6xM5x10	7	90	13	1,7	0,30
IFK 64.90/4	ISP 25.82/4C45	45	70	93	82	-	14	17	-	25	9	4	90	8xM5x16	7	340	27	4,9	0,53
IFK 64.120/4	ISP 30.115/4C50	50	98	122	115	-	16	19	-	30	9	4	90	8xM5x16	7	680	45	21,5	1,22
IFK 78.120/4	ISP 30.110/4C50	50	90	120	110	-	25	28	-	30	14	4	90	8xM5x16	7	982	65	28	1,73
IFK 78.140/4	ISP 35.130/4C55	55	110	140	130	-	30	33	-	35	14	4	90	8xM6x16	12	1195	68	66	2,90
IFK 78.160/4	ISP 40.150/4C60	60	130	160	150	-	30	33	-	40	14	4	90	8xM6x16	12	1920	96	117	3,90
IFK 104.140/4	ISP 35.125/4C55	55	100	140	125	-	35	38	-	35	18	4	90	8xM6x16	12	1385	79	57	2,60
IFK 104.160/4	ISP 40.145/4C60	60	120	160	145	-	35	38	-	40	18	4	90	8xM6x16	12	2220	111	119	4,19
IFK 124.160/4	ISP 40.140/4C60	60	115	160	140	-	40	43	-	40	18	4	90	8xM6x16	12	2460	123	118	4,44
IFK 124.180/4	ISP 45.160/4C70	70	135	180	160	-	45	48	-	45	18	4	90	10xM6x16	12	3000	133	226	6,54
IFK 124.200/4	ISP 50.180/4C80	80	152	200	180	120	50	53	20	50	18	4	90	10xM6x20	12	4100	164	402	9,21
IFK 146.200/4	ISP 50.185/4C80	80	150	200	185	116	60	65	28	50	22	4	90	10xM6x20	12	5200	208	538	11,73
IFK 146.200/5	ISP 50.185/5C80	80	150	200	185	116	60	65	28	50	22	5	72	10xM6x20	12	5200	208	538	11,73
IFK 146.250/4	ISP 60.230/4C100	100	200	250	230	-	70	75	-	60	22	4	90	10xM6x20	12	9800	327	1500	21,27
IFK 146.250/5	ISP 60.230/5C100	100	200	250	230	-	70	75	-	60	22	5	72	10xM6x20	12	9800	327	1500	21,27
IFK 146.250/6	ISP 60.230/6C100	100	200	250	230	-	70	75	-	60	22	6	60	10xM6x20	12	9800	327	1500	21,27
IFK 146.310/5	ISP 80.290/5C150	150	260	310	290	-	75	80	-	80	22	5	72	10xM8x25	32	13600	340	4061	35,90
IFK 146.310/6	ISP 80.290/6C150	150	260	310	290	-	75	80	-	80	22	6	60	10xM8x25	32	13600	340	4061	35,90
IFK 146.310/8	ISP 80.290/8C150	150	260	310	290	-	75	80	-	80	22	8	45	10xM8x25	32	13600	340	4061	35,90

[1] Dimension “W” is a preferred dimension for the bore.

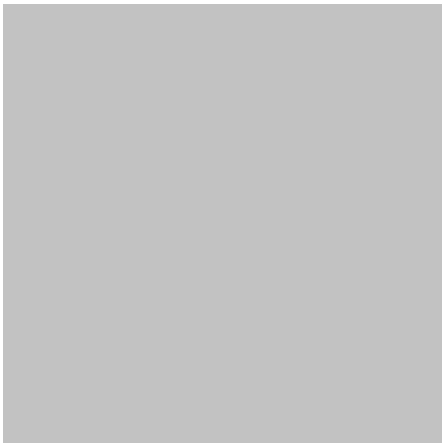
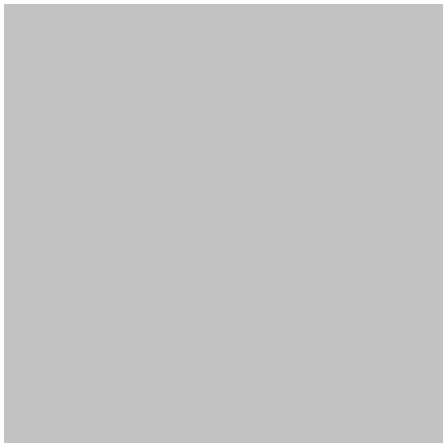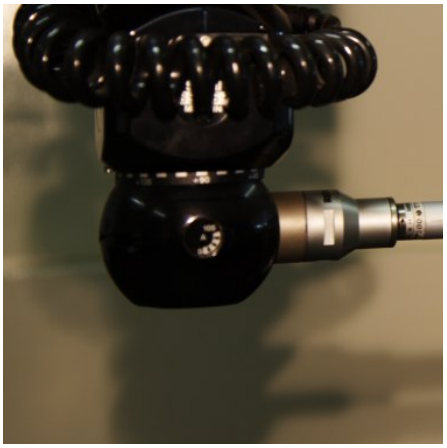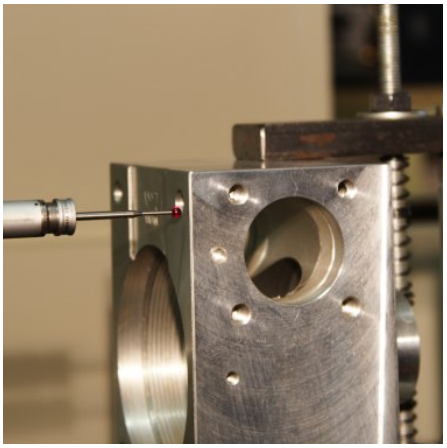
NR 6236