DRIVE-TECHNOLOGY

INKOMA - GROUP

KL Spiral bevel gear units

INKOMA-GROUP

INKOMA-GROUP Headoffice
Sitz der INKOMA Maschinenbau GmbH
Neue Reihe 44
D - 38162 Schandelah - Germany

phone: +49/(0)5306-9221-0
fax: +49/(0)5306-9221-50
e-mail: info@inkoma.de
internet: www.INKOMA-GROUP.com

We reserve the right to make technical changes.
2014-1-MP-OE-e © INKOMA-GROUP

Product description

Spiral bevel gear units KL-0 to KL-25

INKOMA-spiral bevel gear units type KL are fitted with Klingelnberg spiral bevel gears to provide efficient transmission of very high torque loads. They ensure quiet, vibration free running and, due to their symetrical layout, have extremely compact dimensions.

INKOMA-spiral bevel gear units type KL are manufactured in high quality grey cast iron. All mounting faces are precisely machined.

INKOMA-spiral bevel gear units incorporate a newly patented feature allowing minimal backlash to be economically achieved. The clearance in the gears can be simply adjusted without the need for disassembly.

For all normal applications INKOMA-spiral bevel gear units are lubricated for life. Only in cases of particlularly high speeds is there a need to provide special lubrication and gearbox ventilation.

In addition to the catalogue listed options there are other versions and ratios available. Please consult our engineers or your local sales office.

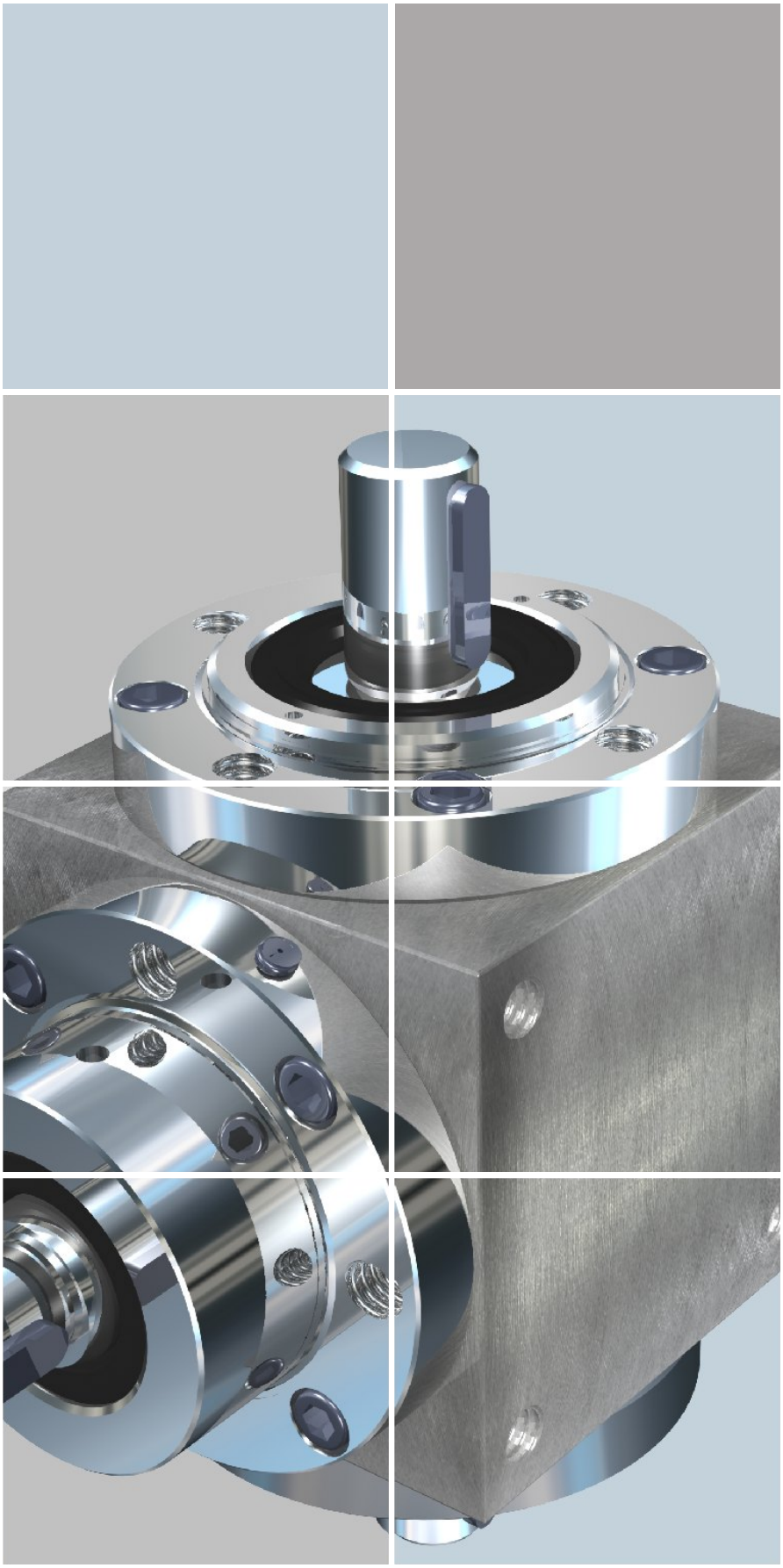

Selection of gear units

Spiral bevel gear units KL-0 to KL-25

When ordering please provide the output speed n_2 [1/min], the duty ED [%/h], the operating temperature (if this deviates from standard -10°C to +50°C) and the mounting attitude.
Note: in the event of high duty ED [%/h] and high output speed n_2 it may be necessary to provide for gearbox ventilation. Please discuss this with our engineers or your local sales office.

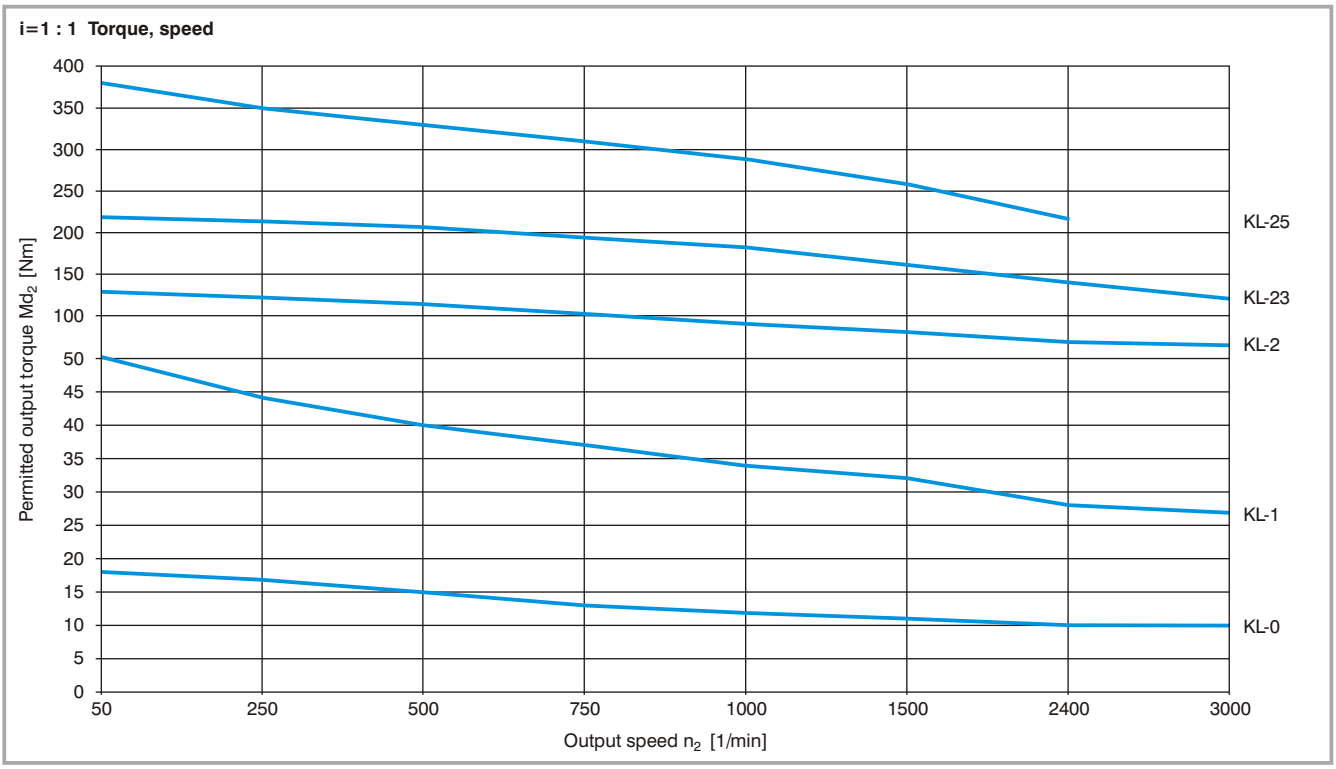

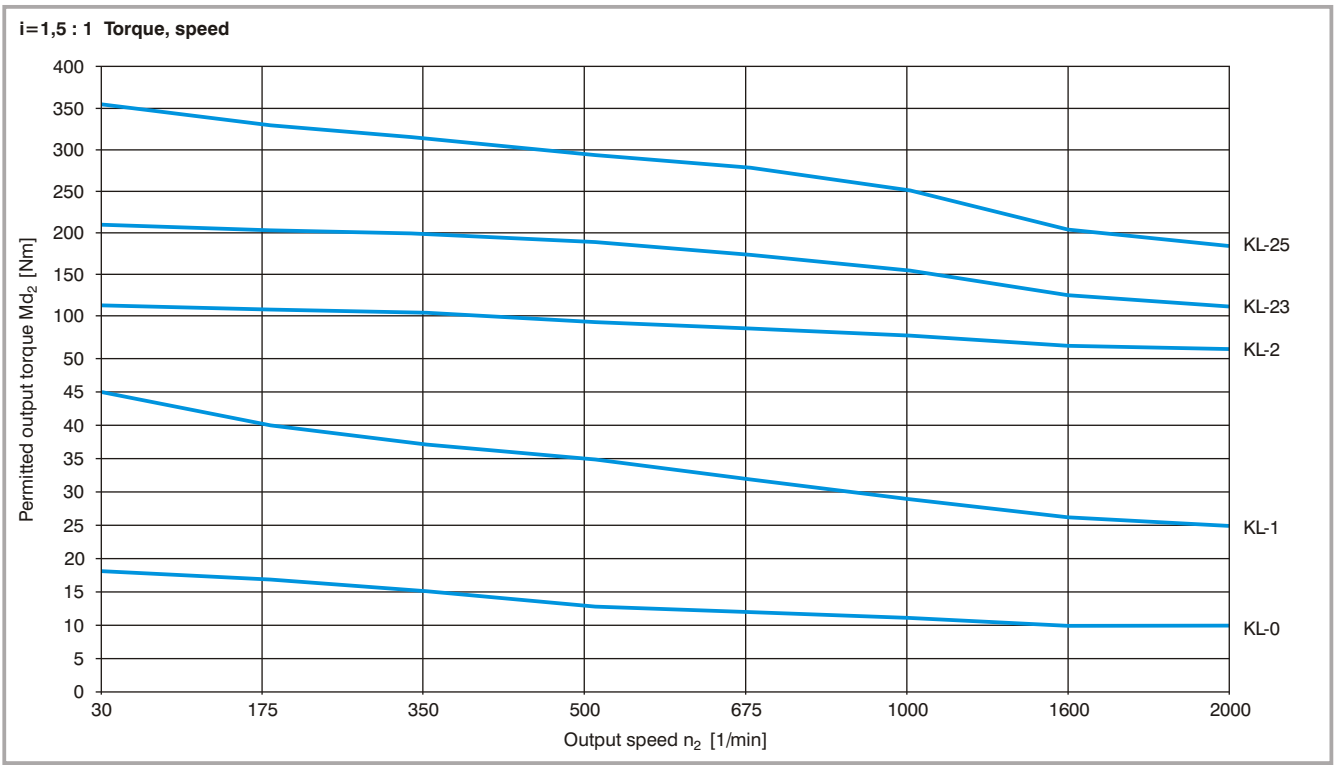

i=2 : 1 Torque, speed

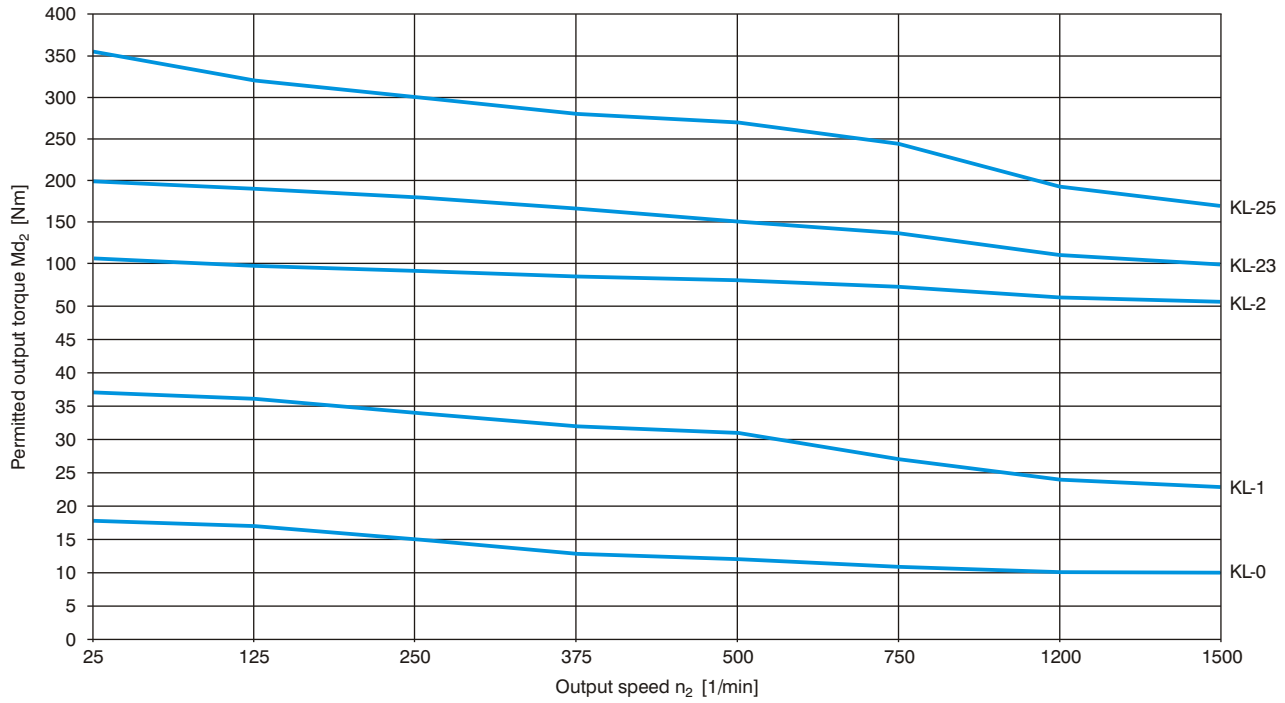

i=3 : 1 Torque, speed

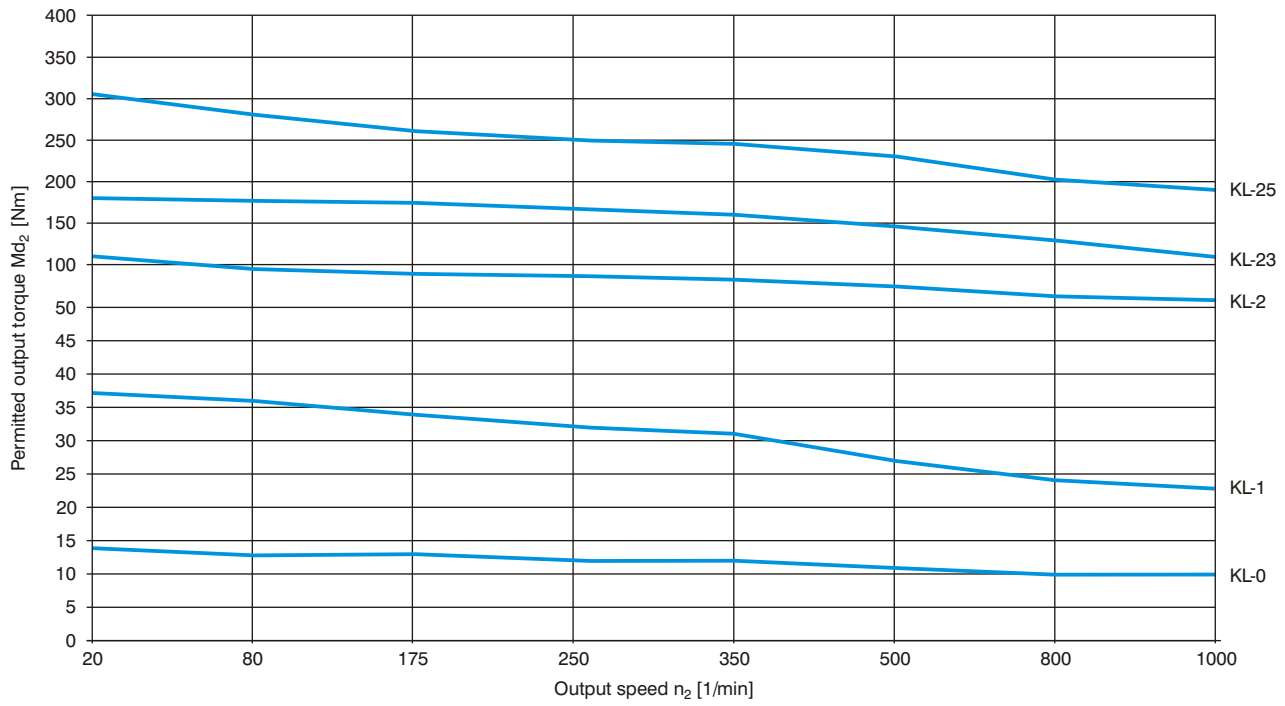

Dimensions

KL - Spiral bevel gear units

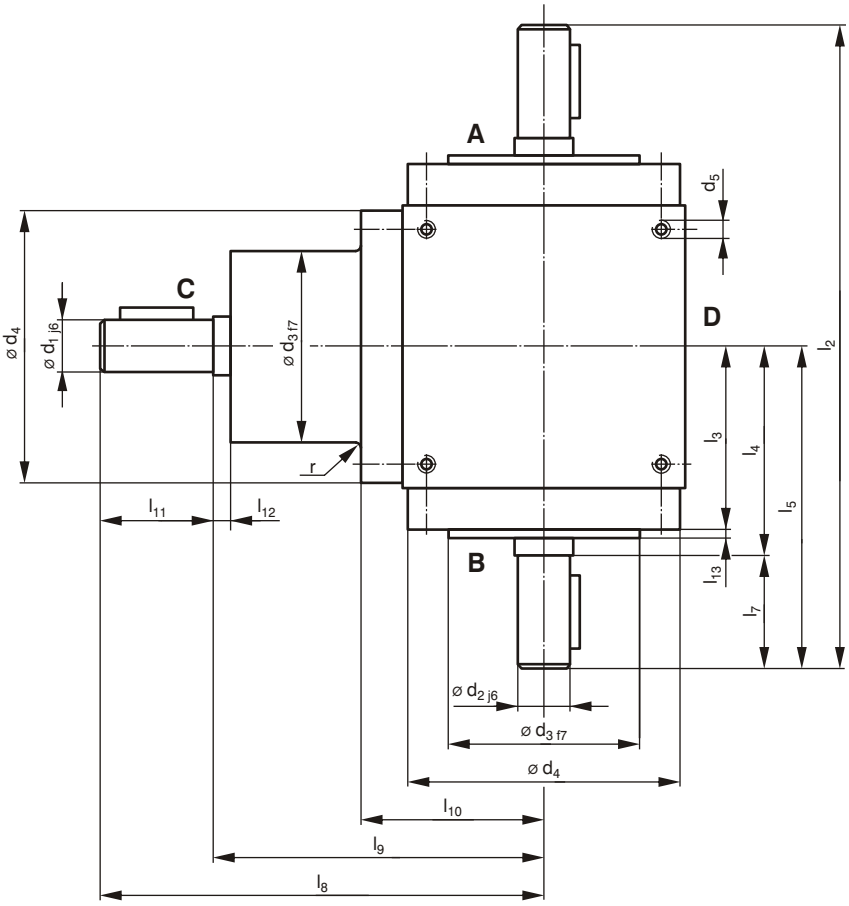

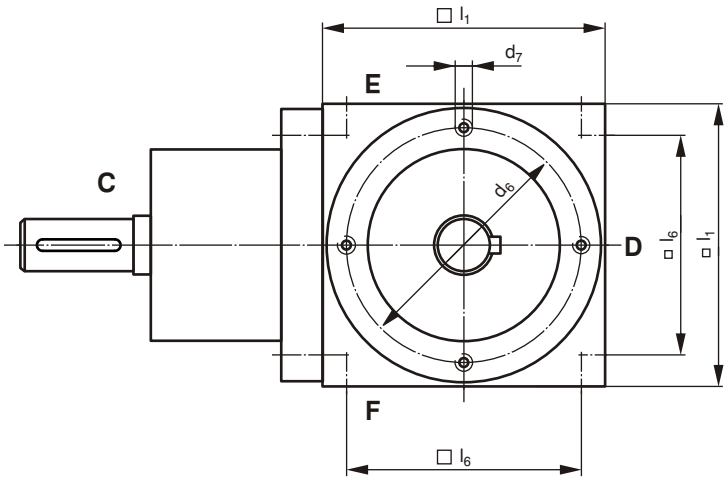

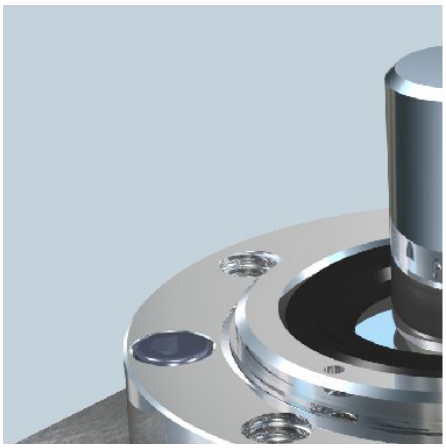

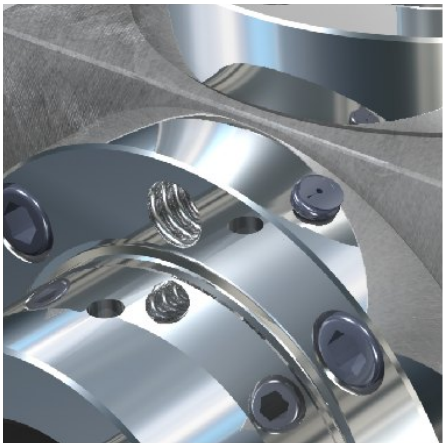

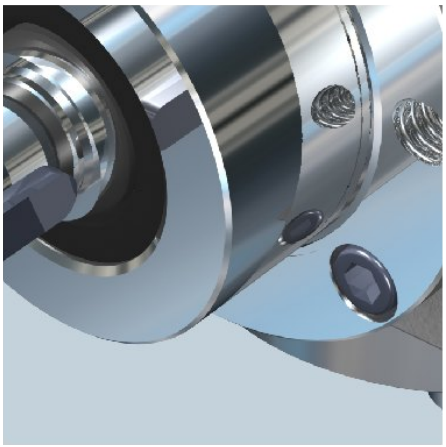

Ordering example:

Spiral bevel gear units
Arrangement
Ratio
Output speed [1/min]

KL-1 - Ba 30 - i=2:1/700

Order code	Ratio i	Dimensions [mm]																				
		d_1	d_2	d_3	d_4	d_5	d_6	d_7 [1]	l_1	l_2	l_3	l_4	l_5	l_6	l_7	l_8	l_9	l_{10}	l_{11}	l_{12}	l_{13}	r
KL-0	1:1	12	12	44	64,7	M6x12	54	M5	65	144	42	46	72	45	26	100	74	42	26	2	2	-
KL-0	1,5:1	12	12	44	64_{f7}	M6x12	54	M6	65	144	42	46	72	45	26	100	74	42	26	2	2	0,5
KL-0	2:1	12	12	44	64,7	M6x12	54	M5	65	144	42	46	72	45	26	100	74	42	26	2	2	-
KL-0	3:1	12	12	44	64_{f7}	M6x12	54	M6	65	144	42	46	72	45	26	100	74	42	26	2	2	0,5
KL-1	1:1	18	18	60	89,7	M8x14	75	M8	90	190	55	60	95	70	35	122	87	55	35	2	2	-
KL-1	1,5:1	18	18	60	89_{f7}	M8x14	75	M8	90	190	55	60	95	70	35	122	87	55	35	2	2	1
KL-1	2:1	18	18	60	89,7	M8x14	75	M8	90	190	55	60	95	70	35	122	87	55	35	2	2	-
KL-1	3:1	12	18	60	89_{f7}	M8x14	75	M8	90	190	55	60	95	70	35	122	87	55	35	2	2	1
KL-2	1:1	25	25	80	119,7	M10x16	100	M10	120	244	72	77	122	100	45	162	117	75	45	2	3	-
KL-2	1,5:1	25	25	80	119_{f7}	M10x16	100	M10	120	244	72	77	122	100	45	162	117	75	45	2	3	1
KL-2	2:1	25	25	80	119,7	M10x16	100	M10	120	244	72	77	122	100	45	162	117	75	45	2	3	-
KL-2	3:1	20	25	80	119,7	M10x16	100	M10	120	244	72	77	122	100	45	162	117	75	45	2	3	-
KL-23	1:1	32	32	90	135_{f7}	M10x20	115	M10	140	274	82	87	137	110	50	180	130	85	50	2	3	1,5
KL-23	1,5:1	32	32	90	135_{f7}	M10x20	115	M10	140	274	82	87	137	110	50	180	130	85	50	2	3	1,5
KL-23	2:1	32	32	90	135_{f7}	M10x20	115	M10	140	274	82	87	137	110	50	180	130	85	50	2	3	1,5
KL-23	3:1	28	32	90	135_{f7}	M10x20	115	M10	140	274	82	87	137	110	50	180	130	85	50	2	3	1,5
KL-25	1:1	35	35	110	159_{f7}	M12x24	135	M12	160	320	95	100	160	120	60	212	152	95	60	2	3	2
KL-25	1,5:1	35	35	110	159_{f7}	M12x24	135	M12	160	320	95	100	160	120	60	212	152	95	60	2	3	2
KL-25	2:1	35	35	110	159_{f7}	M12x24	135	M12	160	320	95	100	160	120	60	212	152	95	60	2	3	2
KL-25	3:1	28	35	100	159_{f7}	M12x24	135	M12	160	320	95	100	160	120	60	212	152	95	60	2	3	2

[1] Tapped hole depth ≙ flange thickness

Other available ratios: i = 4, 5 and 6 (KL-1 to KL-25)
For other ratio options please enquire.

Mounting holes are standard on faces D, E + F, as well as on the flange surfaces of A, B + C.
Additional tapped holes can be optionally provided in the gear housing on faces A, B + C.

Lubrication: Oil (ISO VG 460)

Shaft tolerance: j6

Shaft centre tapped hole: DIN 332 Sheet 2

Keyways: DIN 6885 Sheet 1

Larger gearboxes sizes are available upon request.
Gearboxes with additional shafts and different designs are available upon request.
Hollow shaft gearboxes are available upon request.

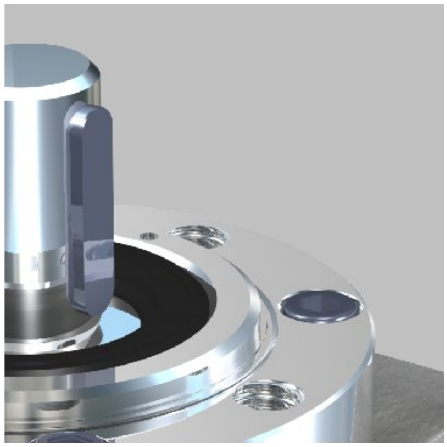

Arrangement of spiral bevel gear units

Ba 30

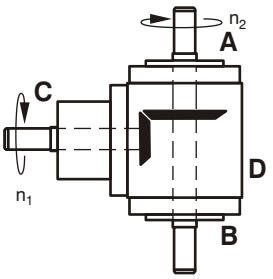

Ba 40

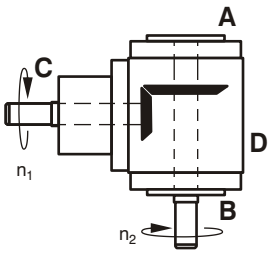

Ba 50

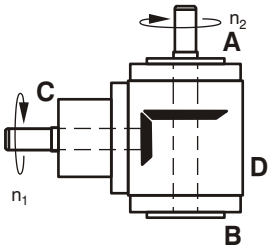

Ba 60

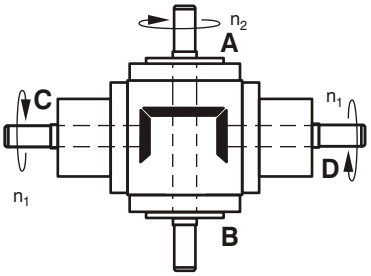

Installation example

Spiral bevel gear units KL-0 to KL-25

The design of INKOMA-spiral bevel gear units KL allows simple combination with other products.

KL - spiral bevel gear unit

HSG - precision screw jack
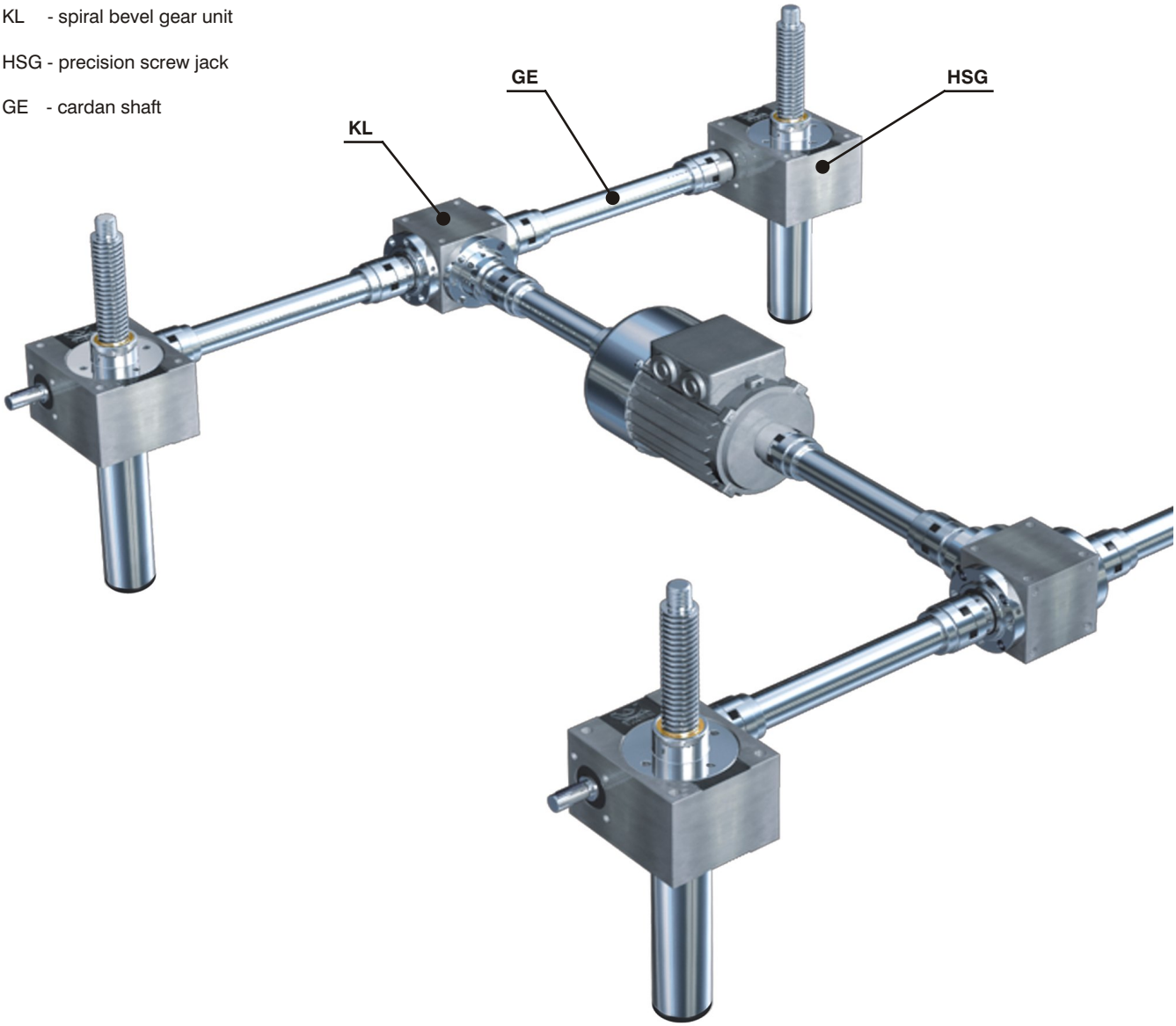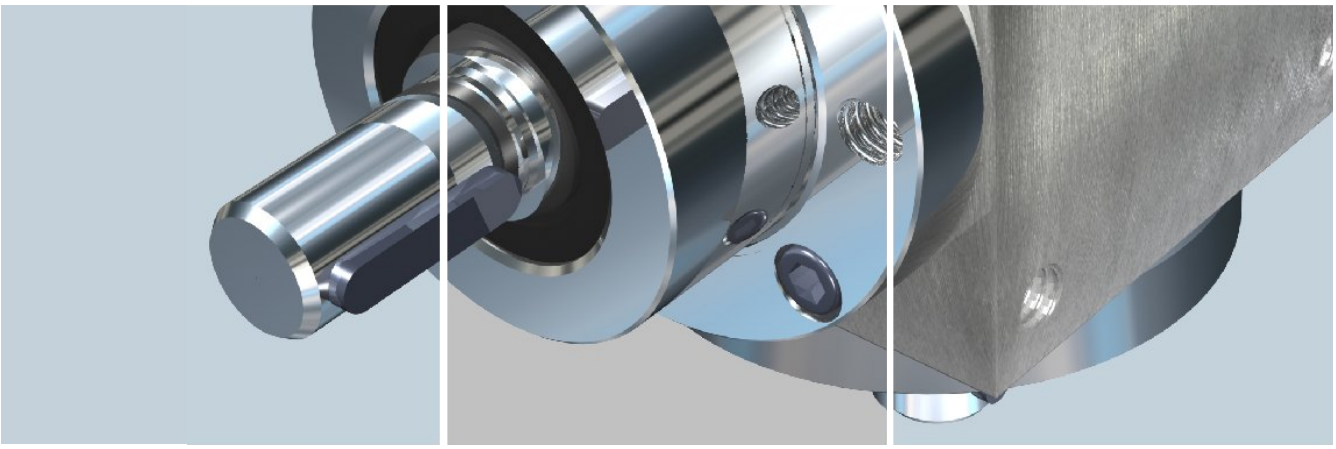
GE - cardan shaft