INKOMA - GROUP

Shaft-hub connections

INKOMA-GROUP

INKOMA-GROUP Headoffice
Sitz der INKOMA Maschinenbau GmbH
Neue Reihe 44
D - 38162 Schandelah - Germany

phone: +49/(0)5306-9221-0
fax: +49/(0)5306-9221-50
e-mail: info@inkoma.de
internet: www.INKOMA-GROUP.com

Product description

P3G- and P4C-Polygon profile, splined shaft, muff coupling

INKOMA shaft-hub connections provide for cost saving design, using assembly ready standardised components, without compromising quality.
A variety of components and designs provide an effective method for the transmission of rotary motion and torque.
Since the beginning of the last century patents have existed for the manufacture of near triangular profiles having a cycloid boundary. It has taken practically a century to develop the manufacture of Polygon profiles.
Polygon profiles are principally for the transmission of torque. They provide an ideal alternative to other profiles, splines and knurls.
The Polygon profile has no notch sensitivity, has constant inertia and transmits torque by pure torsion. In comparison with traditional profiles the Polygon has around 30% more load carrying capability. The product range comprises Polygon shafts, Polygon hubs, clamp rings and sliding naves.
This product range is designed to allow the combination of a wide array of ready-to-assemble options in differing materials for a range of applications. By combining flanged hubs with clamp rings the quality of the required fit (low backlash, lightly sliding and fixed) can be easily adjusted.

INKOMA-shafts:
Supplied in up to 6 m lengths or cut and machined to customers' requirements.

INKOMA-hubs:
These slide on the shafts. Used in conjunction with a clamp ring the required fit condition can be adjusted between sliding and fixed.

INKOMA-clamp rings:
Using a screw and lock nut every variety of fits between sliding and fixed can be achieved.

INKOMA-sliding naves:
Customer's components can be machined with the required profile.

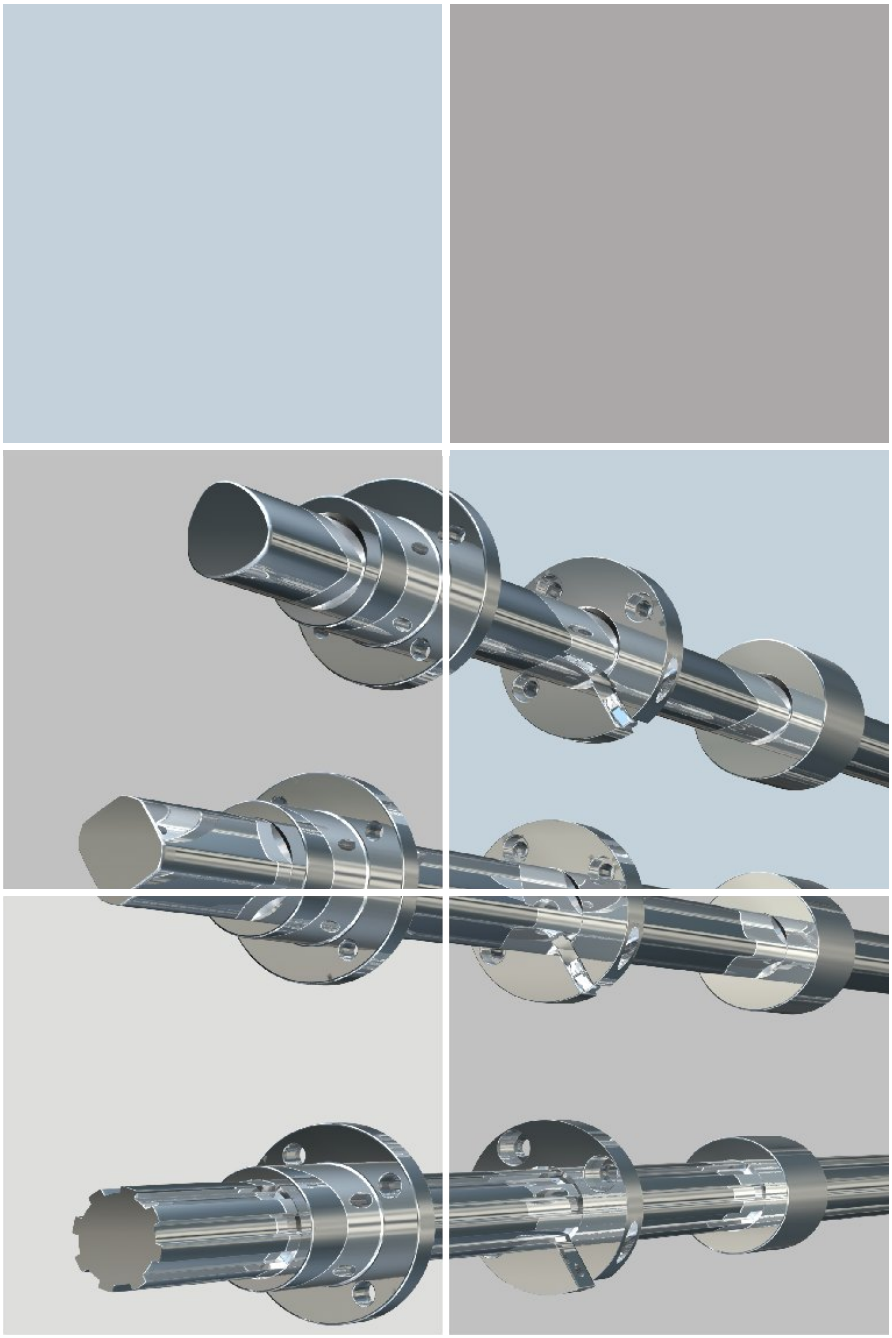

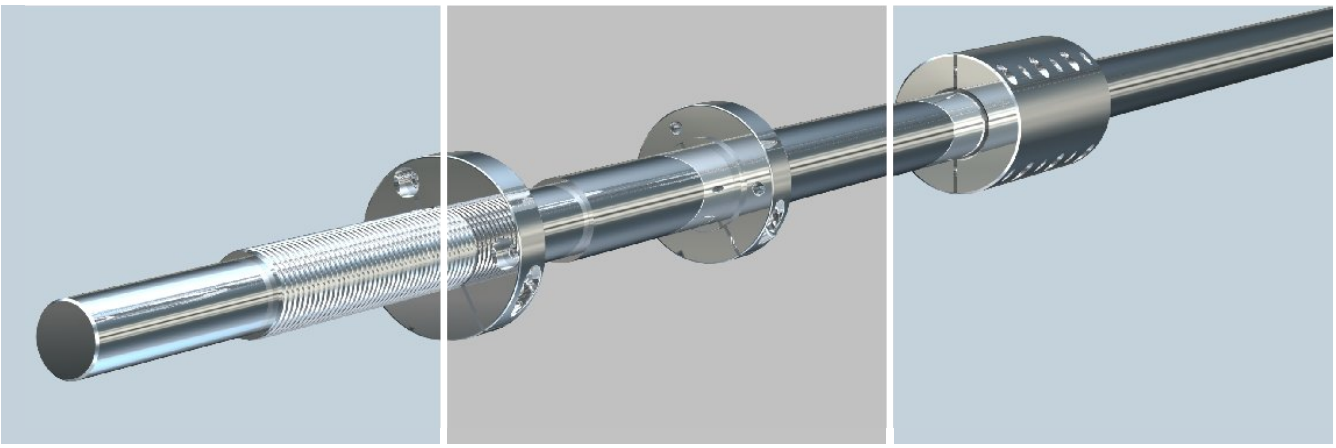

Contents list

P3G-, P4C-Polygon profiles, splined shafts and connections for cylindrical shafts

Contents list

P3G-, P4C-Polygon profiles, splined shafts and connections for cylindrical shafts

Technical information

Pre-selection and product comparison

Initial selection of the size of shaft to be used should be on the basis of torsional effects.

As an approximation use the internal surface area of the profile. Since the Polygon profile has no edges, fatigue effects can be ignored.

Due to the favourable dimensions and since stress concentrations can be ignored in the strength calculation, a higher section modulus is achieved.

Professor Dr. Ing. R Musyl of Graz Technical University conducted comparative calculations to determine the polar moment of inertia of, simple keyed connections, 6 splines profile, and P4C-Polygon profile. All had a nominal effective diameter of 25 mm.
The accompanying table demonstrates his results.

To complete this comparison the P3G profile is shown. It should be noted that this profile is only for use in situations where torque is transmitted without sliding.

Moments of inertia	without reference to stress concentration		with reference to stress concentration	
	axial J_x; J_y [cm⁴]	polar J_p [cm⁴]	axial β_k; J_x; J_y [cm⁴]	polar β_k; J_p [cm⁴]
Keyed shaft DIN 6885/2 D= ø 25 mm 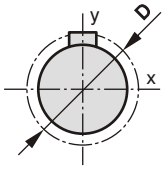	J_x= 0,76852 J_y= 0,94673	J_p= 1,71525	β_{kt}= 1,4 $J_{x\ \beta k}$= 0,54894 $J_{y\ \beta k}$= 0,67624	β_{kt}= 1,4 $J_{p\ \beta k}$= 1,22518
Six toothed spline DIN 5461 D= ø 25 mm 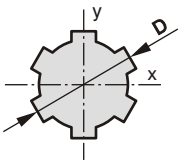	J_x= J_y= 1,35865	J_p= 2,71730	β_{kt}= 1,7 $J_{x\ \beta k}$= $J_{y\ \beta k}$= 0,79921	β_{kt}= 1,7 $J_{p\ \beta k}$= 1,59842
Polygon profile P4C D= d_1= ø 25 mm e= 5 mm b= 21 mm 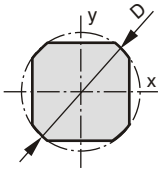	J_x= J_y= 1,37456	J_p= 2,74912	β_{kt}= 1,0 J_x= J_y= 1,37456	β_{kt}= 1,0 J_p= 2,74912
Polygon profile P3G D= D_M= 25 mm d_1= 26,6 mm d_2= 23,4 mm e= 0,8 mm 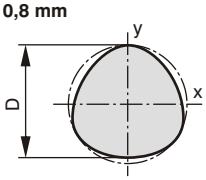	J_x= J_y= 1,865	J_p= 3,73	β_{kt}= 1,0 J_x= J_y= 1,865	β_{kt}= 1,0 J_p= 3,73

Product description

P3G-Polygon profile

INKOMA-P3G-Polygon profiles have the following properties:

1. The P3G-Polygon profile is designed for use where stable shaft-hub connections exist. It is unsuitable for applications having axial sliding under load.
2. Self centering
3. Compared with splined profiles INKOMA-P3G-Polygon profiles have aproximately 30% higher fatigue resistance.
4. The shaft profile is produced by grinding.
5. Both broaching and grinding are used for the manufacture of hub components.
6. Extremely accurate running concentricity results when the shaft and hub are produced by grinding.

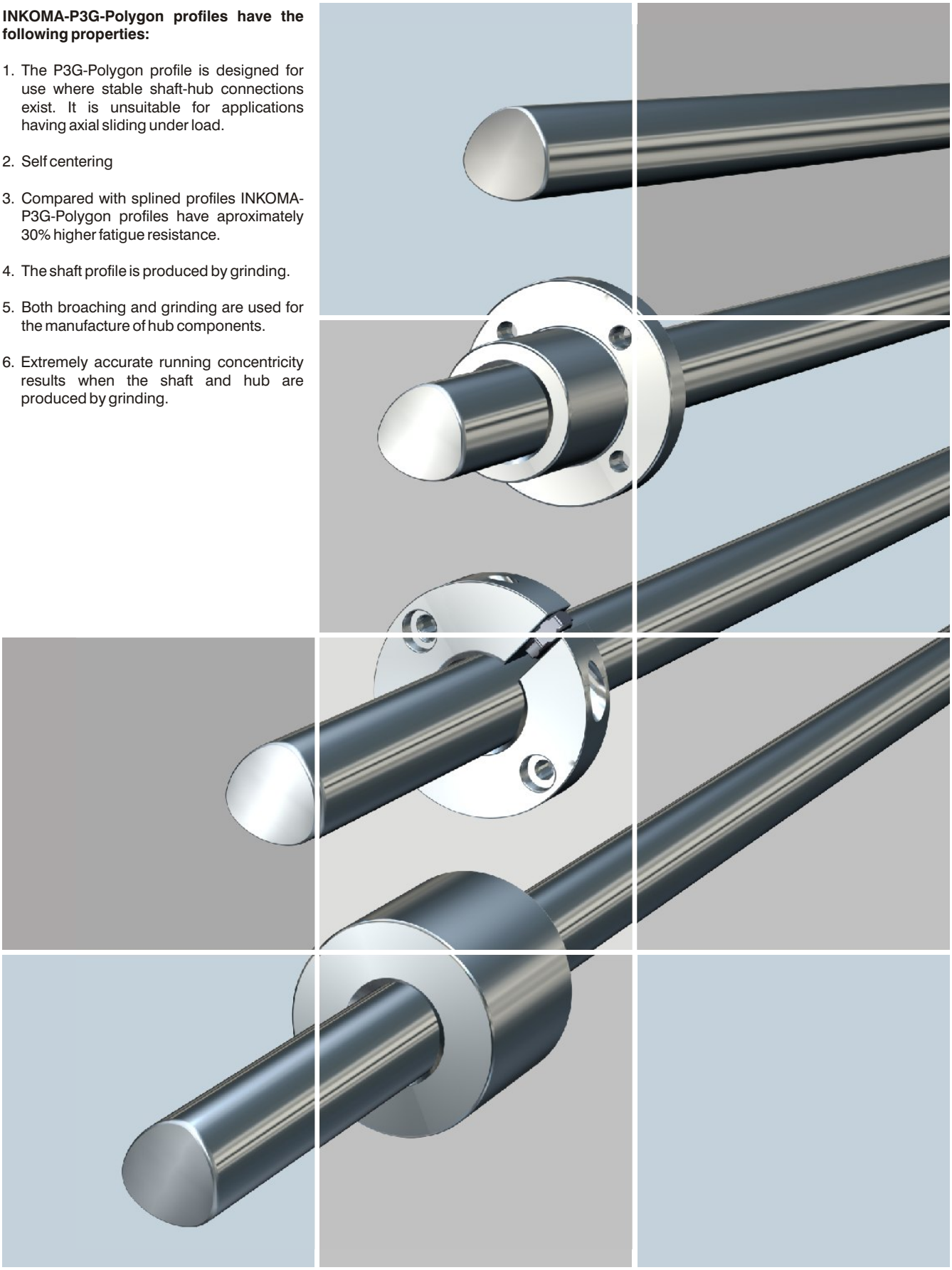

Pre-selection and calculation

P3G-Polygon profile DIN 32711

Strength calculation:

Basics for calculation P3G:
The formulae provide for precise calculations.

Explanation:

d_1	[cm]	inner circle diameter
d_2	[cm]	outer circle diameter
e	[cm]	degree of eccentricity
k	[-]	$D_M \leq 35$ k = 1,44 $D_M > 35$ k = 1,20
l	[cm]	hub length
p	[N/cm²]	specific contact stress
s	[cm]	thinnest section of hub wall
y_{eff}	[µm]	effective hub distortion
y_1	[µm/N]	specific hub distortion
A	[cm²]	cross sectional area of P3G profile

D_M	[cm]	average diameter
G	[N/cm²]	moduls of rigidity ($80 \cdot 10^5$ N/cm² for steel)
J_P	[cm⁴]	moment of inertia in torsion
T_t	[Ncm]	torsional moment
W_P	[cm³]	polar moment of resistance
W_x	[cm³]	equatorial moment of resistance
$\sigma_{z\,perm.}$	[N/cm²]	permissible tensile stress
τ	[N/cm²]	torsional strain
ϑ	[°/cm]	torsional displacement

Pre-selection of the P3G profile:
When the torque T_t to be transmitted is known the required Polygon profile can be determined using the graph. Curves I, II and III apply to the load factor (steady, variable and reversing loading).

Pre-selection of the P3G profile

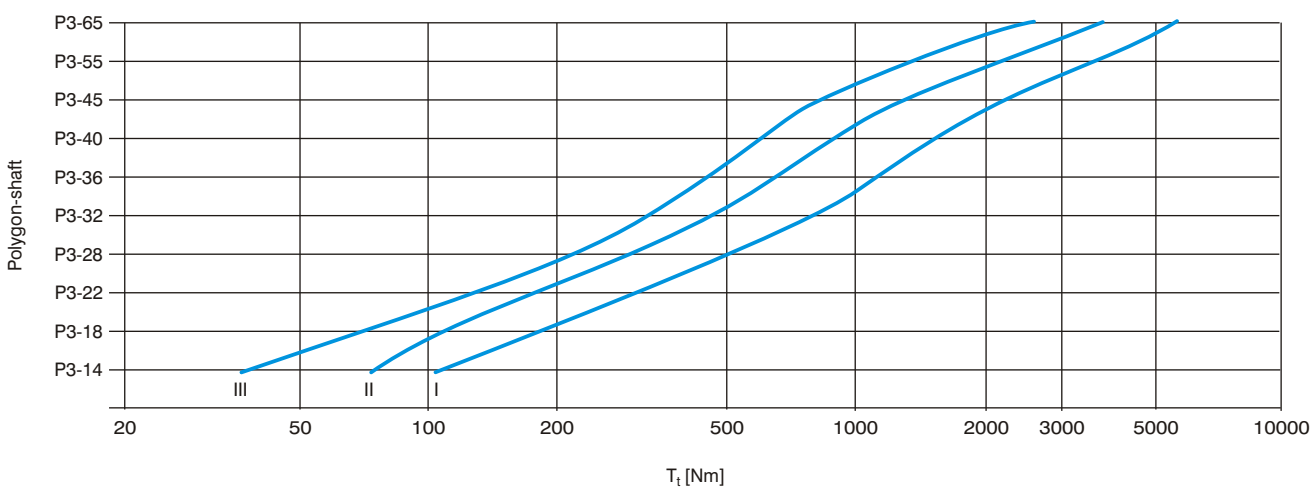

Pre-selection and calculation

P3G-Polygon profile DIN 32711

Shaft and hub calculation:

Shaft:

Torsional strain $\tau = \frac{T_t}{W_p} \leq \tau_{perm.}$

$W_p \approx \frac{2 \cdot J_p}{D_M}$

Bending stress $\sigma_b = \frac{M_b}{W_x} \leq \sigma_{b\,perm.}$

$W_x \approx \frac{J_p}{D_M}$

Torsional displacement $\vartheta = \frac{180°}{\pi} \cdot \frac{T_t \cdot l}{G \cdot J_p}$

$J_p = \frac{\pi \cdot D_M^2}{4} \cdot \left(\frac{D_M^2}{8} - 3 \cdot e^2\right) - 6 \cdot \pi \cdot e^4$

Hub:

Specific contact stress $p = \frac{T_t}{l \cdot \left(0{,}75 \cdot \pi \cdot D_M \cdot e + \frac{D_M^2}{20}\right)}$

Hub wall thickness $s = k \cdot \sqrt{\frac{T_t}{\sigma_{z\,perm.} \cdot l}}$

Effective hub distortion $y_{eff} = \frac{T_t}{l} \cdot y_1$

The graphical values y_1 apply for steel with E = 210000 N/mm².
For materials having a different modulus E_1 multiply the y_1 value with $\frac{210000\ N/mm^2}{E_1}$

Effective hub distortion

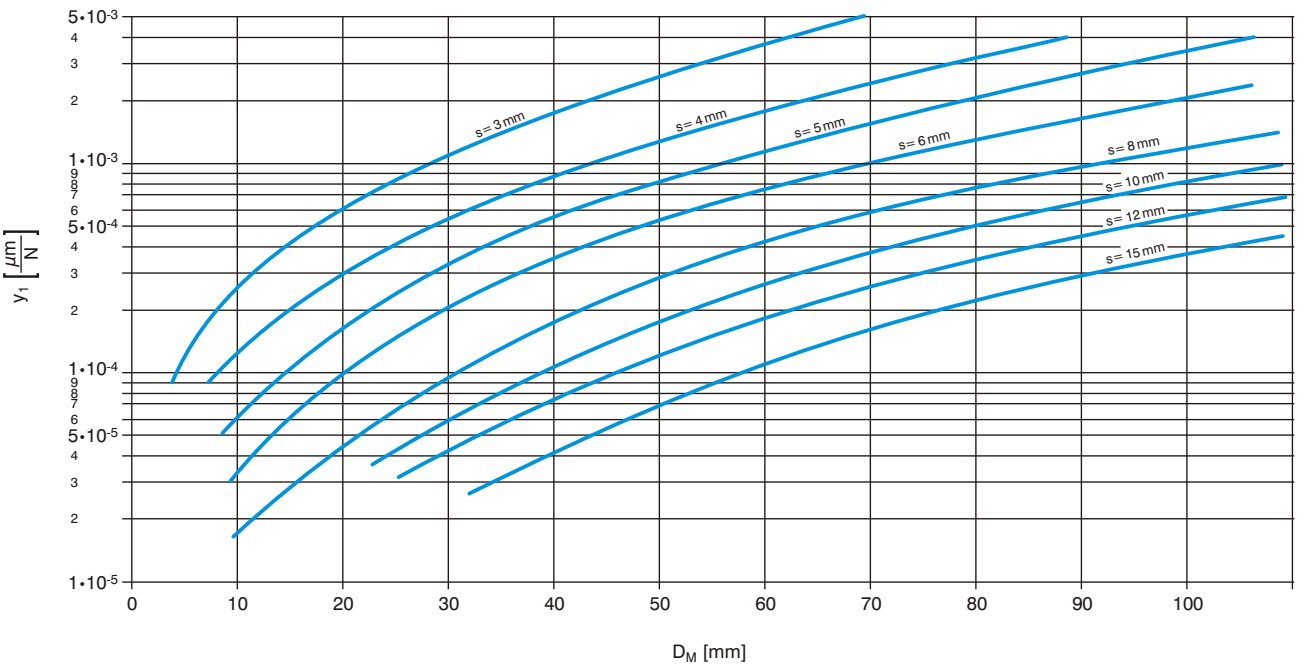

Dimensions

P3G-Polygon - Welle (geschliffen)

INKOMA-Polygon P3G shaft profiles are produced by grinding and are to DIN 32711.
Supplied in various materials, usually in C 45 and lengths up to 2 m depending on the size of the profile.

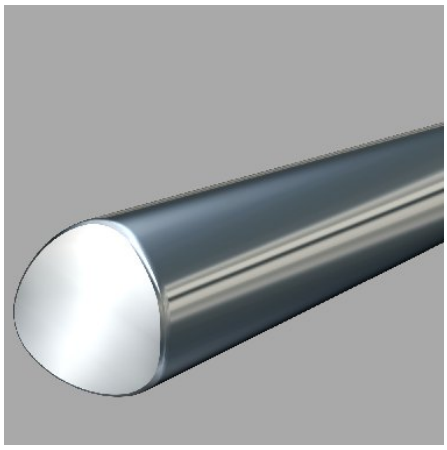

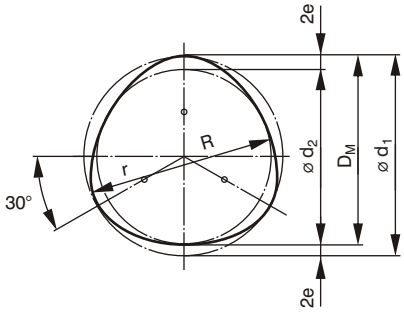

Dimension r and R for illustration only, instead of cycloidal.

Ordering example:

Polygon P3G - shaft
Dimension D_M
Material

P3-14 C 45

Polygon P3G - hub

INKOMA-Polygon P3G hubs are prepared to DIN 32711

Supplied in:
- Steel C 45 St
- Bronze Bz 12 Bz

other materials and surface treatments are supplied.
Please enquire.

For missing profile dimensions see Polygon-shafts.

Ordering example:

Polygon P3G - hub
Dimension D_M
Material

PH-3-14 St

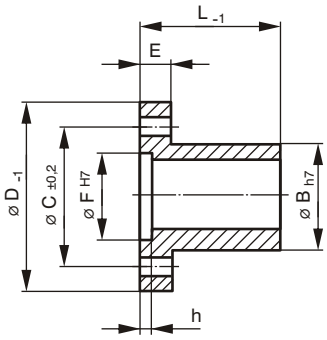

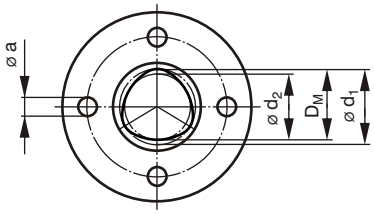

Order code	Dimensions [mm]							Section modulus			
	D_M	Tolerances $D_{M\ g6}$	d_1	d_2	e	R	r	W_p [cm³]	W_x [cm³]	A [cm²]	Mass [kg/m]
P3-14	14	-0,006 / -0,017	14,88	13,12	0,44	9,86	4,14	0,45	0,25	1,51	1,19
P3-18	18	-0,006 / -0,017	19,12	16,88	0,56	12,64	5,36	0,96	0,53	2,50	1,98
P3-22	22	-0,007 / -0,020	23,40	20,60	0,70	15,55	6,45	1,75	0,96	3,74	2,95
P3-28	28	-0,007 / -0,020	29,80	26,20	0,90	19,85	8,15	3,60	1,97	6,05	4,78
P3-32	32	-0,009 / -0,025	34,24	29,76	1,12	23,28	8,72	5,30	2,91	7,88	6,23
P3-36	36	-0,009 / -0,025	38,50	33,50	1,25	26,13	9,87	6,90	3,80	9,97	7,88
P3-40	40	-0,009 / -0,025	42,80	37,20	1,40	29,10	10,90	10,45	5,69	12,31	9,72
P3-45	45	-0,009 / -0,025	48,20	41,80	1,60	32,90	12,10	14,79	8,08	15,57	12,30
P3-55	55	-0,010 / -0,029	59,00	51,00	2,00	40,50	14,50	27,00	14,71	23,24	18,36
P3-65	65	-0,010 / -0,029	69,90	60,10	2,45	48,43	16,57	44,20	24,20	32,39	25,59

Special profiles are available. Please enquire.

Order code	Dimensions [mm]												Mass [kg/apiece]
	D_M	Tolerances D_M H7	d_1	d_2	B	C	D	E	F	L	a	h	
PH-3-14	14	+0,018 / 0	14,88	13,12	22	30	42	8	20	28	5,3	3	0,12
PH-3-18	18	+0,018 / 0	19,12	16,88	30	40	54	9	25	40	5,3	3	0,24
PH-3-22	22	+0,021 / 0	23,40	20,60	38	50	65	10	30	50	6,4	3,5	0,44
PH-3-28	28	+0,021 / 0	29,80	26,20	45	60	79	12	40	60	8,4	4	0,77
PH-3-32	32	+0,025 / 0	34,24	29,76	50	65	84	12	45	65	8,4	4	0,89
PH-3-36	36	+0,025 / 0	38,50	33,50	55	70	90	15	50	70	8,4	4	1,10
PH-3-40	40	+0,025 / 0	42,80	37,20	60	75	95	15	55	80	8,4	4	1,27
PH-3-45	45	+0,025 / 0	48,20	41,80	70	85	108	16	60	85	10,5	4	2,00
PH-3-55	55	+0,030 / 0	59,00	51,00	80	96	118	16	70	98	10,5	4	2,32
PH-3-65	65	+0,030 / 0	69,90	60,10	90	106	130	18	80	110	10,5	4	3,36

Special sizes according to your drawing.

Dimensions

Polygon P3G - clamp ring

The INKOMA-Polygon P3G clamp ring is made to DIN 32711

Supplied in:
- Steel C 45 St
- Bronze Bz 12 Bz

other materials and surface treatments are supplied.
Please enquire.

For missing profile dimensions see
Polygon-shafts page 364.

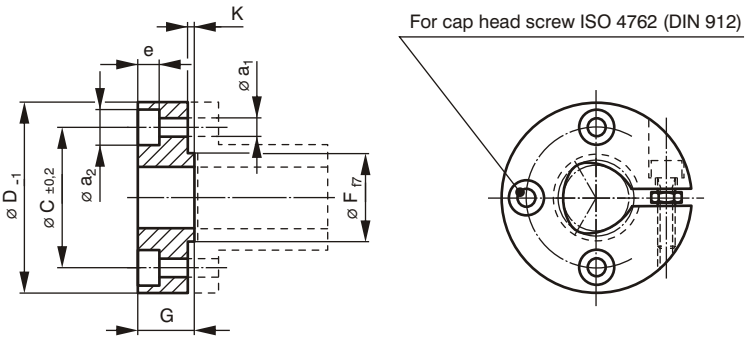

Ordering example:

Polygon P3G - clamp ring
Dimension D_M
Material

PKR-3-14 St

Polygon P3G - sliding nave

The INKOMA-Polygon P3G sliding nave is made to DIN 32711

Supplied in:
- Steel C 45 St
- Bronze Bz 12 Bz

other materials and surface treatments are supplied.
Please enquire.

For missing profile dimensions see Polygon-shafts page 364.

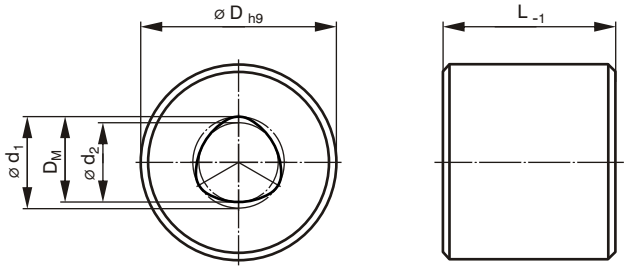

Ordering example:

Polygon P3G - sliding nave
Dimension D_M
Material

PSH-3-14 St

Polygon P3G - sub-contract machining

In addition to our range of standard items broached with splined and Polygon profiles we offer a wide range of other internal forms. E.g. keyways, serrations to DIN 5481, involutes to DIN 5480 and 5482, etc.

Please enquire about special internal profiles.
We will be pleased to assist.

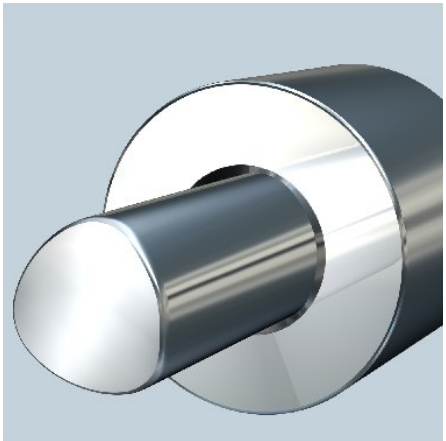

Order code	Dimensions [mm]												Mass [kg]
	D_M	Tolerances D_M H7	d_1	d_2	C	D	F	G	K	a_1	a_2	e	
PKR-3-14	14	+0,018 / 0	14,88	13,12	30	42	20	14	2	5,3	10	6	0,12
PKR-3-18	18	+0,018 / 0	19,12	16,88	40	54	25	16	2	5,3	10	6	0,23
PKR-3-22	22	+0,021 / 0	23,40	20,60	50	65	30	18	3	6,4	11	7	0,34
PKR-3-28	28	+0,021 / 0	29,80	26,20	60	79	40	23	3	8,4	15	9	0,63
PKR-3-32	32	+0,025 / 0	34,24	29,76	65	84	45	23	3	8,4	15	9	0,78
PKR-3-36	36	+0,025 / 0	38,50	33,50	70	90	50	25	3	8,4	15	9	0,89
PKR-3-40	40	+0,025 / 0	42,80	37,20	75	95	55	27	3	8,4	15	9	1,03
PKR-3-45	45	+0,025 / 0	48,20	41,80	85	108	60	27	3	10,5	18	11	1,44
PKR-3-55	55	+0,030 / 0	59,00	51,00	96	118	70	29	3	10,5	18	11	1,60
PKR-3-65	65	+0,030 / 0	69,90	60,10	106	130	80	29	3	10,5	18	11	1,97

Special sizes according to your drawing.

Order code	Dimensions [mm]						Mass [kg]
	D_M	Tolerances D_M H7	d_1	d_2	D	L	
PSH-3-14	14	+0,018 / 0	14,88	13,12	35	28	0,19
PSH-3-18	18	+0,018 / 0	19,12	16,88	45	40	0,41
PSH-3-22	22	+0,021 / 0	23,40	20,60	55	50	0,76
PSH-3-28	28	+0,021 / 0	29,80	26,20	65	60	1,27
PSH-3-32	32	+0,025 / 0	34,24	29,76	75	65	1,80
PSH-3-36	36	+0,025 / 0	38,50	33,50	80	70	2,09
PSH-3-40	40	+0,025 / 0	42,80	37,20	85	80	2,56
PSH-3-45	45	+0,025 / 0	48,20	41,80	90	85	3,02
PSH-3-55	55	+0,030 / 0	59,00	51,00	100	95	3,80
PSH-3-65	65	+0,030 / 0	69,90	60,10	110	110	5,10

Special sizes according to your drawing.

Order code	Pilot bore [mm]	Engaged length [mm]
P3-14	1)	1)
P3-18	⌀ 16,5 + 0,05	16 - 40
P3-22	⌀ 20,1 + 0,05	20 - 50
P3-28	⌀ 25,6 + 0,05	18 - 45
P3-32	⌀ 29,2 + 0,05	18 - 45
P3-36	⌀ 32,9 + 0,05	25 - 70
P3-40	1)	1)
P3-45	1)	1)
P3-55	1)	1)
P3-65	1)	1)

1) These profiles can only be produced by grinding. Please enquire.

Application example

P3G-Polygon profile

By combining Polygon-hub and Polygon-clamp ring the quality of fit can be adjusted.

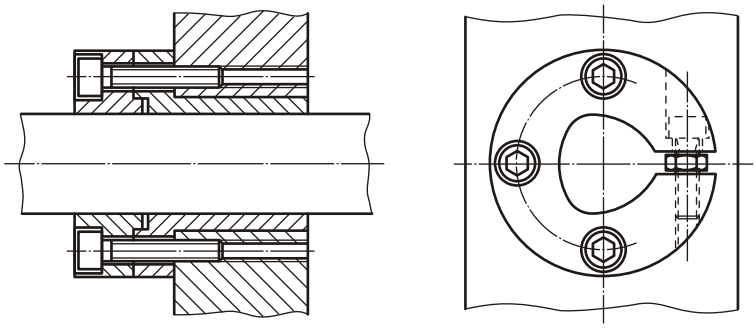

Polygon-clamp ring and chain sprocket. Secured using screws and dowel pins.

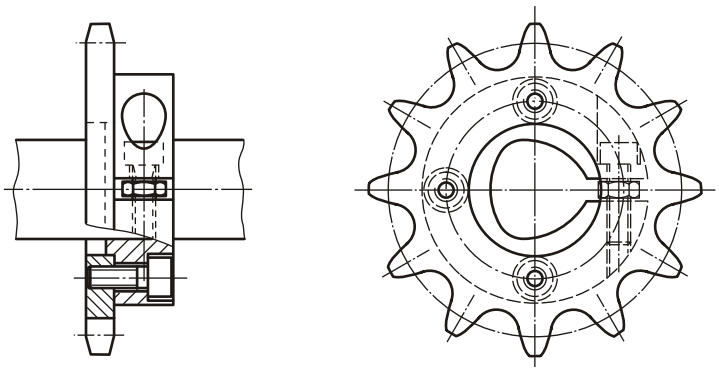

Shaft-hub connection using a conical ground Polygon profile for backlash free torque transmission.

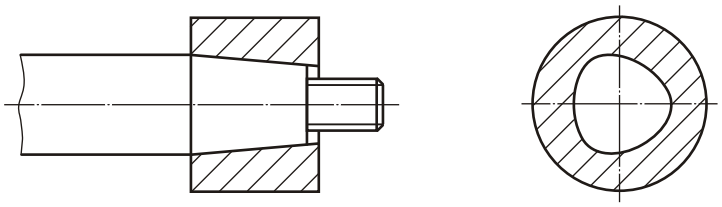

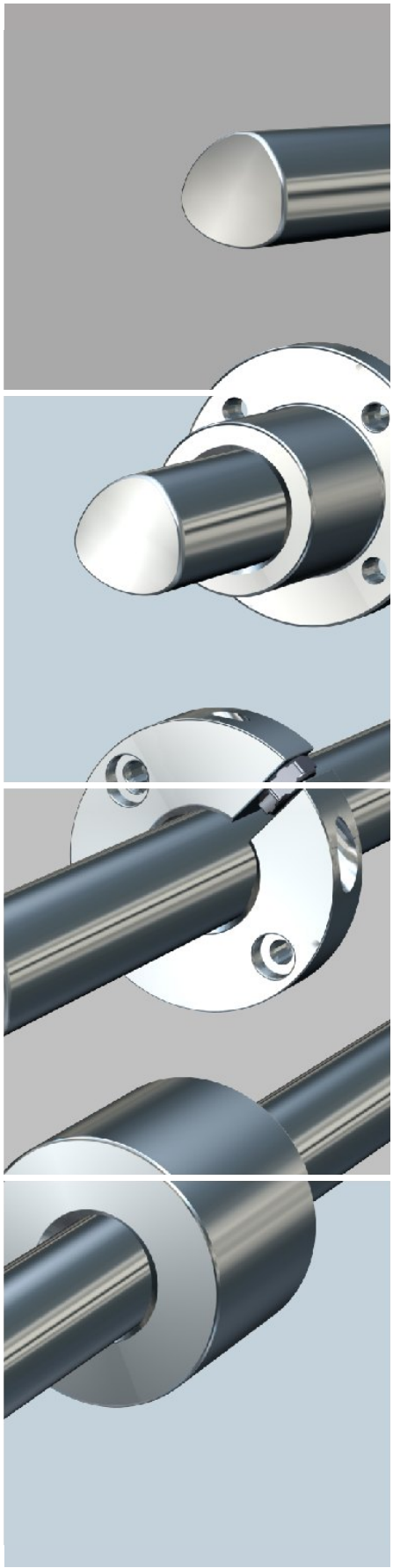

Product description

P4C-Polygon profile

INKOMA-P4C-Polygon profiles have the following properties:

1. The P4C-Polygon profile is suitable for applications where axial sliding, with or without load, is a requirement for the shaft-hub connection, or when torque must be transmitted.

2. Self centering

3. Compared with splined profiles INKOMA-P4C-Polygon profiles have aproximately 30% higher fatigue resistance.

4. P4C-Polygon shafts are supplied cold drawn or ground profile.

5. The internal profile is most economically produced by broaching. Grinding of bores is not possible.

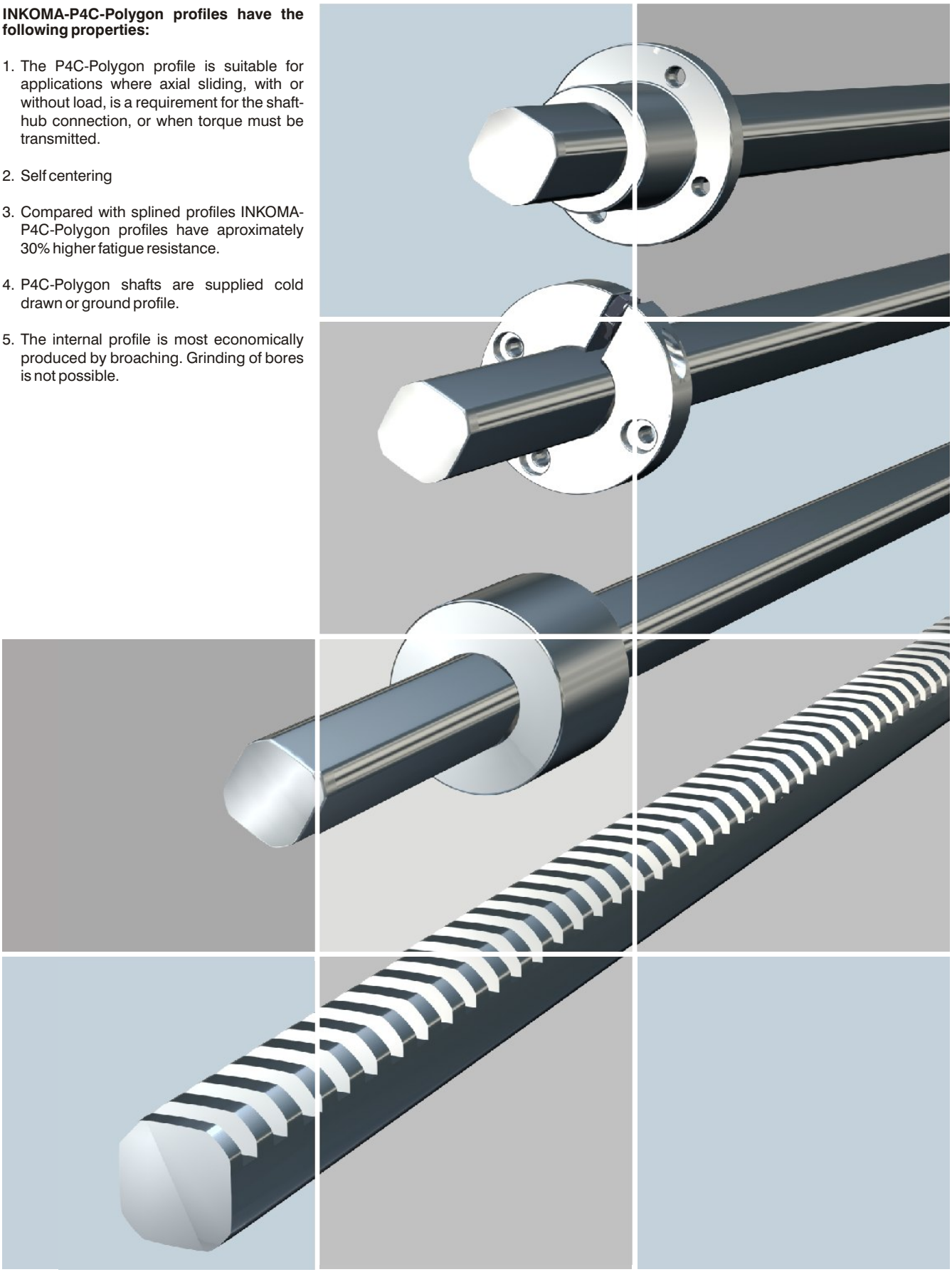

Pre-selection and calculation

P4C-Polygon profile DIN 32712

Strength calculation:

Basics for calculation P4C:
The formulae provide for precise calculations.

Explanation:

b	[cm]	inner circle diameter
d_1	[cm]	outer circle diameter
e	[cm]	degree of eccentricity
d_r	[cm]	calculated theoretical diameter
e_r	[cm]	calculated degree of eccentricity
l	[cm]	hub length
p	[N/cm²]	specific contact stress
s	[cm]	thinnest section of hub wall
y_{eff}	[µm]	effective hub distortion
y_1	[µm/N]	specific hub distortion

A	[cm²]	cross sectional area of P4C profile
G	[N/cm²]	moduls of rigidity ($80 \cdot 10^5$ N/cm² for steel)
J_P	[cm⁴]	polar moment of inertia in torsion
T_t	[Ncm]	torsional moment
W_P	[cm³]	polar moment of resistance
W_x	[cm³]	equatorial moment of resistance
$\sigma_{z\,perm.}$	[N/cm²]	permissible tensile stress
τ	[N/cm²]	torsional strain
ϑ	[°/cm]	torsional displacement

Pre-selection of the P4C profile:
When the torque T_t to be transmitted is known the required Polygon profile can be determined using the graph. Curves I, II and III apply to the load factor (steady, variable and reversing loading).

Pre-selection of the P4C profile

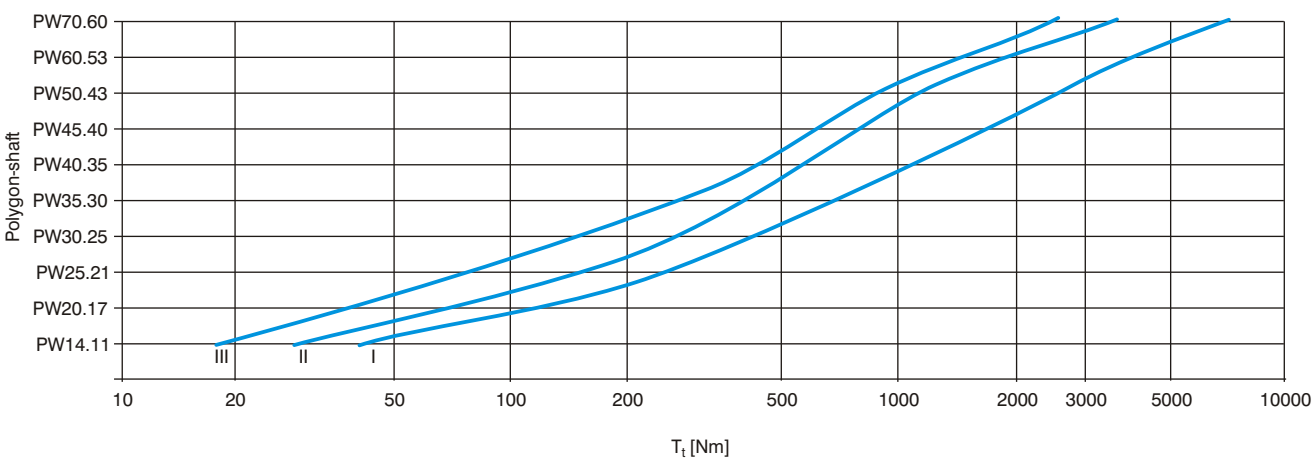

Pre-selection and calculation

P4C-Polygon profile DIN 32712

Shaft and hub calculation:

Shaft:

Torsional strain $\tau = \frac{T_t}{W_p} \leq \tau_{perm.}$

$W_p \approx 0{,}2 \cdot b^3$

Bending stress $\sigma_b = \frac{M_b}{W_x} \leq \sigma_{b\,perm.}$

$W_x \approx 0{,}15 \cdot b^3$

Torsional displacement $\vartheta = \frac{180°}{\pi} \cdot \frac{T_t \cdot l}{G \cdot J_p}$

$J_p \approx 0{,}1 \cdot b^4$

Hub:

Specific contact stress $p = \frac{T_t}{l \cdot \left(\pi \cdot e_r \cdot d_r + \frac{d_r^2}{20}\right)}$

$e_r = \frac{(d_1 - b)}{4}$

$d_r = b + 2 \cdot e$

Hub wall thickness $s = 0{,}7 \cdot \sqrt{\frac{T_t}{\sigma_{z\,perm.} \cdot l}}$

Effective hub distortion $y_{eff} = \frac{T_t}{l} \cdot y_1$

The graphical values y_1 apply for steel with E = 210000 N/mm².
For materials having a different modulus E_1 multiply the y_1 value with $\frac{210000\ N/mm^2}{E_1}$

Effective hub distortion

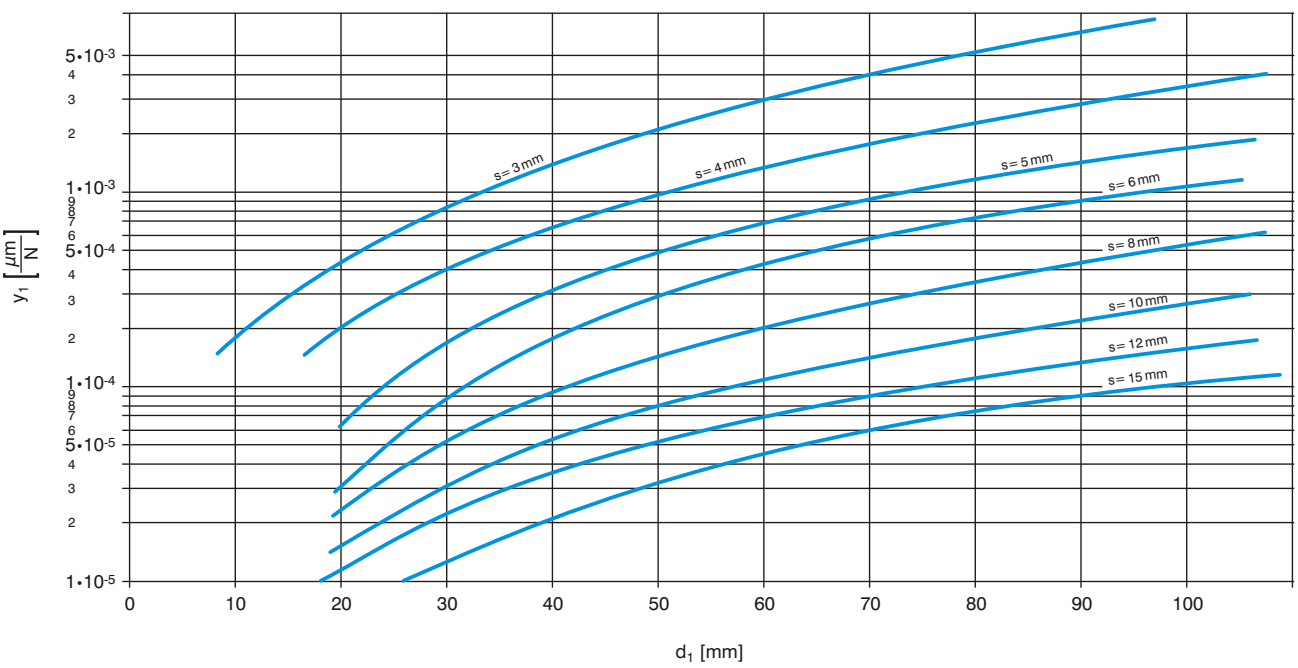

Dimensions

Polygon P4C - shaft (cold drawn)

INKOMA-Polygon P4C profiles are produced by cold drawing according to DIN 32712.

Supplied in:
- Steel Ck 45 St

Standard lengths of 4 to 6 m are supplied or machined to customer requirements.
When ordering a specific length please note that shafts are sawn to length and are not straightened. Should straightening be required we can carry this out at our factory.
Other variants, (material, tolerances) are also available as ground shafts.

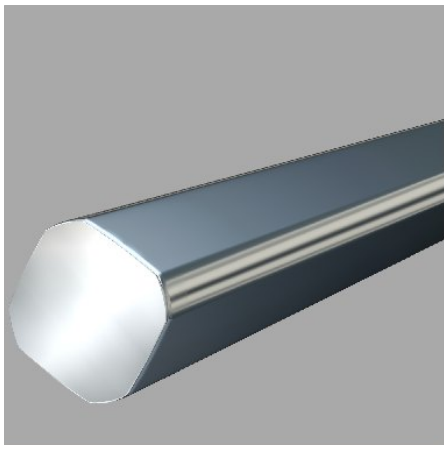

Dimension R for illustration only, instead of cycloidal.

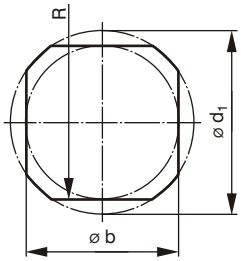

Ordering example:

Polygon P4C - shaft
Dimension d_1
Dimension b
Material

PW 35.30 St

Polygon P4C - hub

INKOMA-Polygon P4C hubs are prepared to DIN 32712.

Supplied in:
- Steel C 45 St
- Bronze Bz 12 Bz

other materials and surface treatments are supplied.
Please enquire.

For missing profile dimensions see Polygon-shafts.

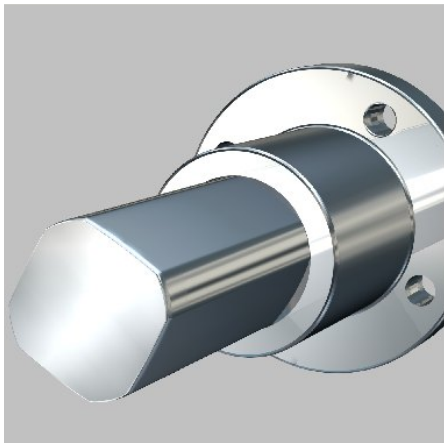

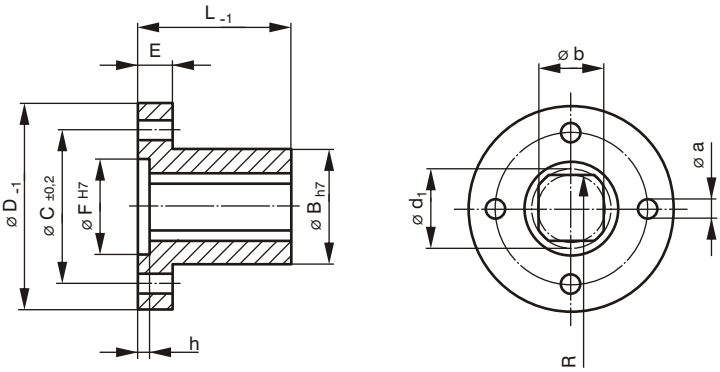

Ordering example:

Polygon P4C - hub
Dimension d_1
Dimension b
Material

PH 35.30 St

Order code	Dimensions [mm]						Section modulus		A [cm²]	Mass [kg/m]
	b	d_1	Tolerances b	Tolerances d_1	R	e	W_p [cm³]	W_x [cm³]		
PW 14.11	11	14	-0,01 / -0,05	-0,060 / -0,122	31,1	1,6	0,27	0,20	1,23	0,97
PW 20.17	17	20	-0,01 / -0,05	-0,060 / -0,122	56,5	3	0,98	0,74	2,69	2,11
PW 25.21	21	25	-0,01 / -0,05	-0,060 / -0,122	90,5	5	1,85	1,39	4,15	3,25
PW 30.25	25	30	-0,01 / -0,05	-0,060 / -0,122	92,5	5	3,13	2,34	5,94	4,66
PW 35.30	30	35	-0,01 / -0,06	-0,060 / -0,122	95,0	5	5,40	4,05	8,29	6,50
PW 40.35	35	40	-0,01 / -0,06	-0,060 / -0,122	113,5	6	8,58	6,43	11,04	8,66
PW 45.40	40	45	-0,01 / -0,06	-0,060 / -0,122	116,0	6	12,80	9,60	14,18	11,13
PW 50.43	43	50	-0,01 / -0,06	-0,060 / -0,122	117,5	6	15,90	11,93	16,97	13,32
PW 60.53	53	60	-0,01 / -0,06	-0,060 / -0,122	122,5	6	29,78	22,33	25,06	19,67
PW 70.60	60	70	-0,01 / -0,06	-0,060 / -0,122	126,0	6	43,20	32,40	33,17	26,00

Stocked lengths 4 - 6 m;
other lengths and special profiles are available.

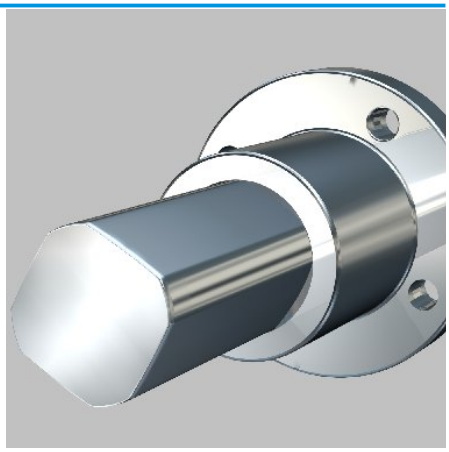

Order code	Dimensions [mm]													Mass [kg]
	b	d_1	Tolerances b H7	Tolerances d_1 H11	R	B	C	D	E	F	L	a	h	
PH 14.11	11	14	+0,018 / 0	+0,110 / 0	31,1	22	30	42	8	20	28	5,3	3	0,12
PH 20.17	17	20	+0,018 / 0	+0,130 / 0	56,5	30	40	54	9	25	40	5,3	3	0,24
PH 25.21	21	25	+0,021 / 0	+0,130 / 0	90,5	38	50	65	10	30	50	6,4	3,5	0,44
PH 30.25	25	30	+0,021 / 0	+0,130 / 0	92,5	45	60	79	12	40	60	8,4	4	0,77
PH 35.30	30	35	+0,021 / 0	+0,160 / 0	95,0	50	65	84	12	45	65	8,4	4	0,89
PH 40.35	35	40	+0,025 / 0	+0,160 / 0	113,5	55	70	90	15	50	70	8,4	4	1,10
PH 45.40	40	45	+0,025 / 0	+0,160 / 0	116,0	60	75	95	15	55	80	8,4	4	1,27
PH 50.43	43	50	+0,025 / 0	+0,160 / 0	117,5	70	85	108	16	60	85	10,5	4	2,00
PH 60.53	53	60	+0,030 / 0	+0,190 / 0	122,5	80	96	118	16	70	98	10,5	4	2,32
PH 70.60	60	70	+0,030 / 0	+0,190 / 0	126,0	90	106	130	18	80	110	10,5	4	3,36

Special sizes according to your drawing.

Dimensions

Polygon P4C - clamp ring

The INKOMA-Polygon P4C clamp ring is made to DIN 32712.

Supplied in:
- Steel C 45 St
- Bronze Bz

other materials and surface treatments are supplied.
Please enquire.

For missing profile dimensions see
Polygon-shafts page 372.

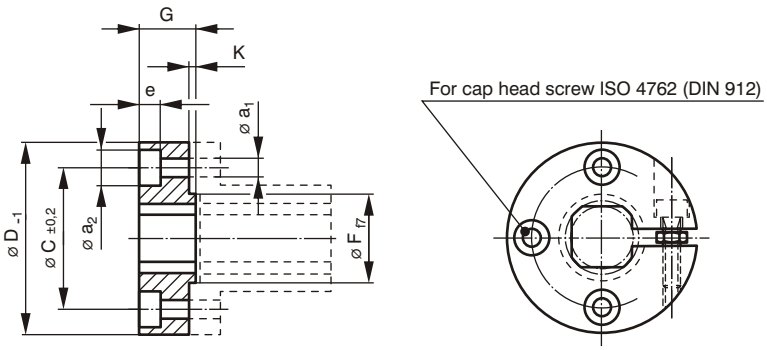

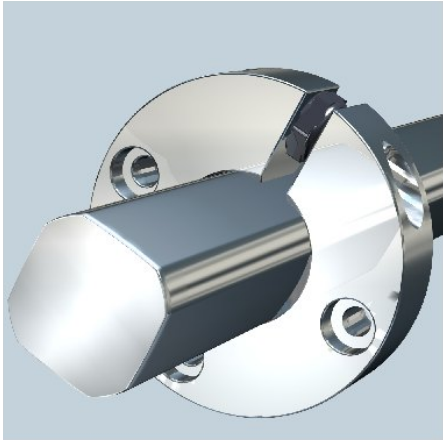

Ordering example:

Polygon P4C - clamp ring
Dimension d_1
Dimension b
Material

PKR 35.30 St

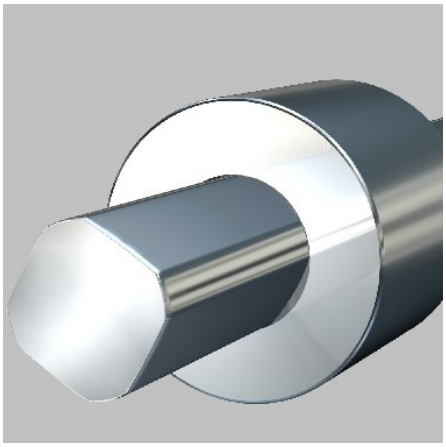

Polygon P4C - sliding nave

The INKOMA-Polygon P4C sliding nave is made to DIN 32712.

Supplied in:
- Steel C 45 St
- Bronze Bz 12 Bz

other materials and surface treatments are supplied.
Please enquire.

For missing profile dimensions see Polygon-shafts page 372.

Ordering example:

Polygon P4C - sliding nave
Dimension d_1
Dimension b
Material

PSH 25.21 St

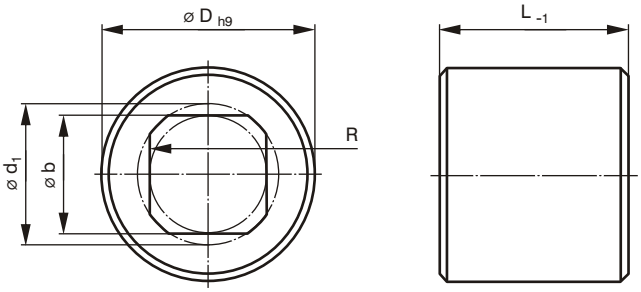

Order code	Dimensions [mm]													Mass [kg]
	b	d_1	Tolerances		R	C	D	F	G	K	a_1	a_2	e	
			b^{H7}	d_1^{H11}										
PKR 14.11	11	14	+0,018 / 0	+0,110 / 0	31,1	30	42	20	14	2	5,3	10	6	0,12
PKR 20.17	17	20	+0,018 / 0	+0,130 / 0	56,5	40	54	25	16	2	5,3	10	6	0,23
PKR 25.21	21	25	+0,021 / 0	+0,130 / 0	90,5	50	65	30	18	3	6,4	11	7	0,34
PKR 30.25	25	30	+0,021 / 0	+0,130 / 0	92,5	60	79	40	23	3	8,4	15	9	0,63
PKR 35.30	30	35	+0,021 / 0	+0,160 / 0	95,0	65	84	45	23	3	8,4	15	9	0,78
PKR 40.35	35	40	+0,025 / 0	+0,160 / 0	113,5	70	90	50	25	3	8,4	15	9	0,89
PKR 45.40	40	45	+0,025 / 0	+0,160 / 0	116,0	75	95	55	27	3	8,4	15	9	1,03
PKR 50.43	43	50	+0,025 / 0	+0,160 / 0	117,5	85	108	60	27	3	10,5	18	11	1,44
PKR 60.53	53	60	+0,030 / 0	+0,190 / 0	122,5	96	118	70	29	3	10,5	18	11	1,60
PKR 70.60	60	70	+0,030 / 0	+0,190 / 0	126,0	106	130	80	29	3	10,5	18	11	1,97

Special sizes according to your drawing.

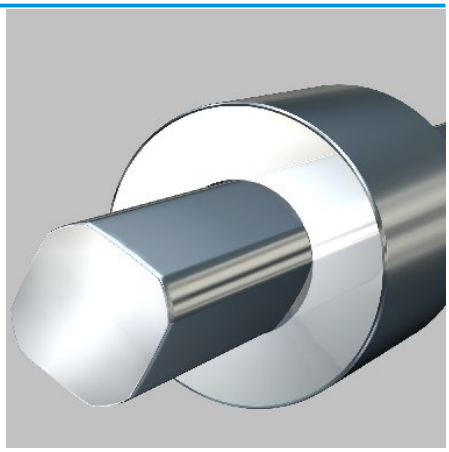

Order code	Dimensions [mm]							Mass [kg]
	b	d_1	Tolerances		R	D	L	
			b^{H7}	d_1^{H11}				
PSH 14.11	11	14	+0,018 / 0	+0,110 / 0	31,1	35	28	0,19
PSH 20.17	17	20	+0,018 / 0	+0,130 / 0	56,5	45	40	0,41
PSH 25.21	21	25	+0,021 / 0	+0,130 / 0	90,5	55	50	0,76
PSH 30.25	25	30	+0,021 / 0	+0,130 / 0	92,5	65	60	1,27
PSH 35.30	30	35	+0,021 / 0	+0,160 / 0	95,0	75	65	1,80
PSH 40.35	35	40	+0,025 / 0	+0,160 / 0	113,5	80	70	2,09
PSH 45.40	40	45	+0,025 / 0	+0,160 / 0	116,0	85	80	2,56
PSH 50.43	43	50	+0,025 / 0	+0,160 / 0	117,5	90	85	3,02
PSH 60.53	53	60	+0,030 / 0	+0,190 / 0	122,5	100	95	3,80
PSH 70.60	60	70	+0,030 / 0	+0,190 / 0	126,0	110	110	5,10

Special sizes according to your drawing.

Dimensions

Polygon P4C - rack

By machining a gear profile into the flank of a Polygon shaft the designer has the basis of an effective, fully guided axial feeding and and positioning system.
Standard Polygon racks are prepared with modern machine tools to the most exacting standards (DIN 3972). The gearing quality is according to Class 8 corresponding to DIN 3962, 3963 and 3967.
An optimal sliding quality is achieved by modifying the tooth tips. It is also possible to use the Polygon rack as an element in a measuring system. Pinions can be supplied or machined to your drawing.

The INKOMA Polygon P4C rack is made to DIN 32712.

Supplied in:
• Steel Ck 45 St

Stocked length 1000 mm
straight gear, lead angle 20°

For missing profile dimensions see Polygon-shafts page 372.

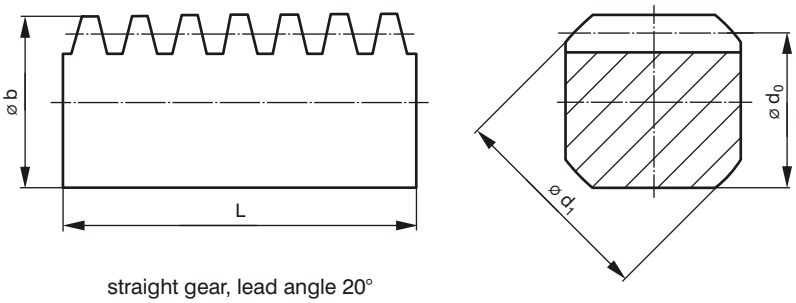

straight gear, lead angle 20°

Ordering example:

Polygon P4C - rack
Dimension d_1
Dimension b
Material

PZ 35.30 St

Polygon - sub-contract machining

In addition to our range of standard items broached with splined and Polygon profiles we offer a wide range of other internal forms. E.g. keyways, serrations to DIN 5481, involutes to DIN 5480 and 5482, etc.
Please enquire about special internal profiles.
We will be pleased to assist.

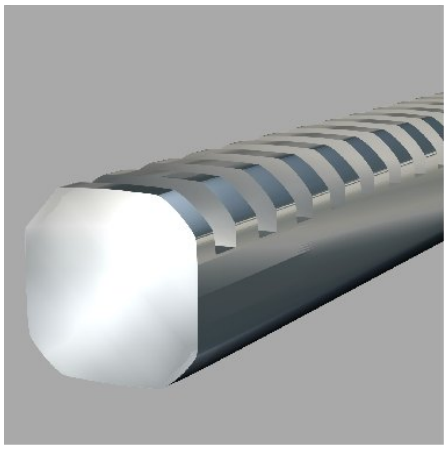

Order code	Dimensions [mm]							Mass [kg/m]
	b	d_1	Tolerances b	Tolerances d_1	R	Gear module	d_0	
PZ 14.11	11	14	-0,01 / -0,05	-0,060 / -0,122	31,1	1,0	10,0	0,90
PZ 20.17	17	20	-0,01 / -0,05	-0,060 / -0,122	56,5	1,5	15,5	1,89
PZ 25.21	21	25	-0,01 / -0,05	-0,060 / -0,122	90,5	2,0	19,0	2,98
PZ 30.25	25	30	-0,01 / -0,05	-0,060 / -0,122	92,5	2,5	22,5	4,12
PZ 35.30	30	35	-0,01 / -0,06	-0,060 / -0,122	95,0	3,0	27,0	5,90
PZ 40.35	35	40	-0,01 / -0,06	-0,060 / -0,122	113,5	3,0	32,0	7,86
PZ 45.40	40	45	-0,01 / -0,06	-0,060 / -0,122	116,0	4,0	36,0	10,10
PZ 50.43	43	50	-0,01 / -0,06	-0,060 / -0,122	117,5	4,0	39,0	12,00
PZ 60.53	53	60	-0,01 / -0,06	-0,060 / -0,122	122,5	5,0	48,0	17,50
PZ 70.60	60	70	-0,01 / -0,06	-0,060 / -0,122	126,0	6,0	54,0	23,45

Racks having other modules and lengths are available. Please enquire.

Order code	Pilot bore [mm]	Engaged length [mm]
P 14.11	⌀ 10,7 H7	14 - 35
P 20.17	⌀ 16,7 H7	14 - 42
P 25.21	⌀ 20,8 H7	20 - 60
P 30.25	⌀ 24,8 H7	24 - 70
P 35.30	⌀ 29,7 H7	24 - 60
P 40.35	⌀ 34,8 H7	25 - 80
P 45.40	⌀ 39,7 H7	25 - 80
P 50.43	⌀ 42,7 H7	30 - 90
P 60.53	⌀ 52,7 H7	34 - 100
P 70.60	⌀ 59,7 H7	40 - 120

Application example

P4C-Polygon profile

By combining Polygon-hub and Polygon-clamp ring the quality of fit can be adjusted.

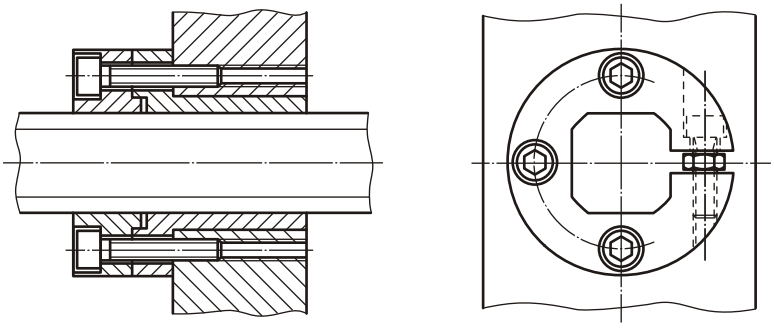

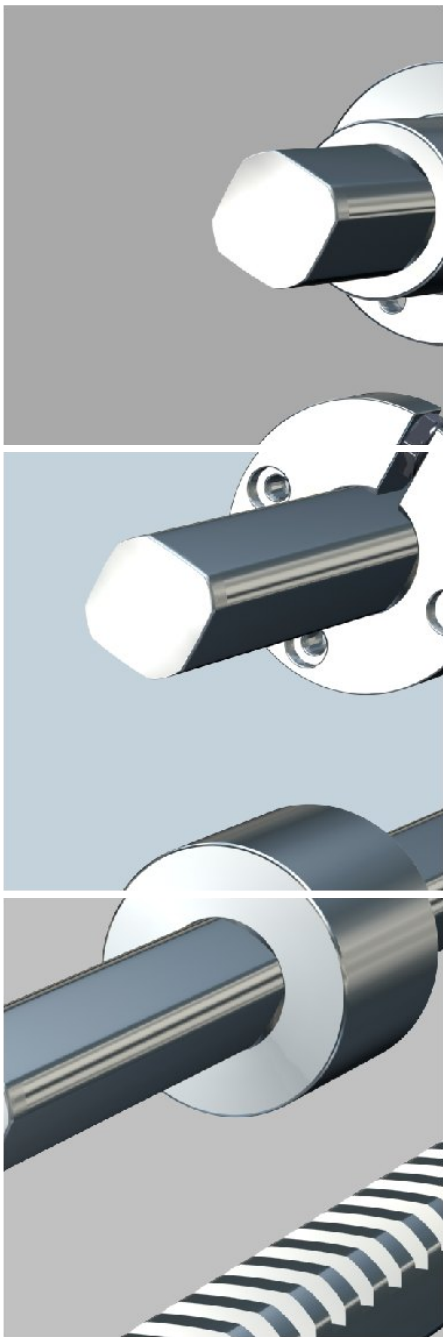

Polygon-clamp ring and chain sprocket. Secured using screws and dowel pins.

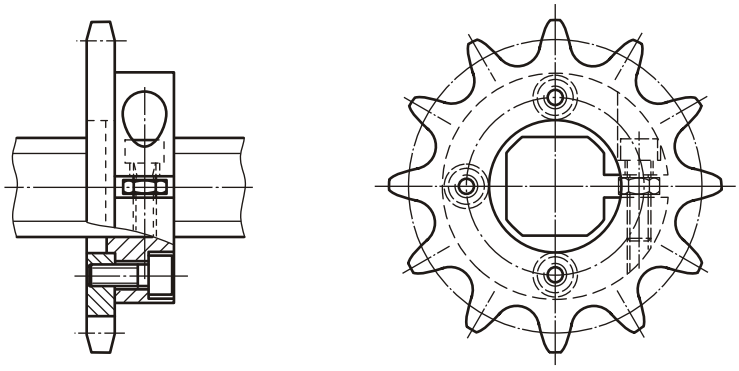

Polygon-shaft with gear.
Gears to customer specification can be broached with a Polygon bore.

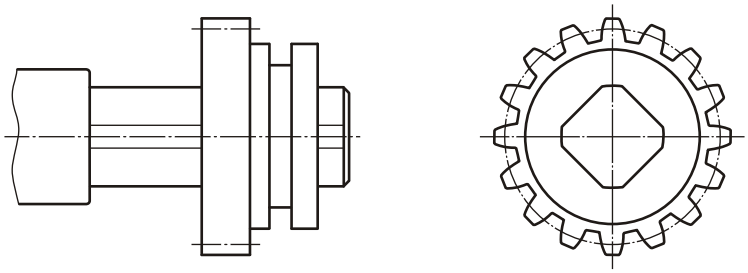

Polygon-shaft with 2 driven Polygon-hubs.

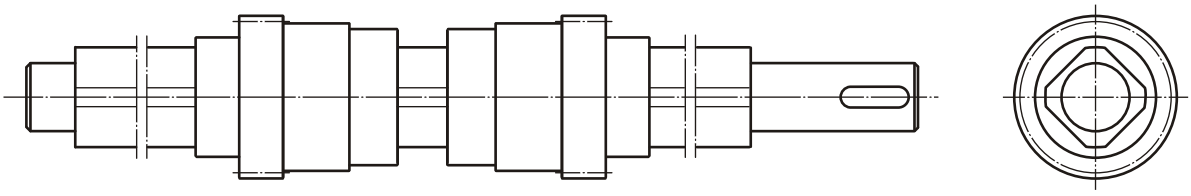

Product description

Splined shafts and connecting elements for cylindrical shafts

INKOMA spline connections, clamp rings and muff couplings are for use in machine building, process plant and tooling.

1. economical
2. simplifies the designers work

A new way of saving costs without compromising quality.

In 1975 this slogan announced the launch of a ready-to-assemble spline connection system. Since then we have grown to become the most important European manufacturer and stockist of this type of product. This success provides the stimulus for the ongoing development and improvement of the product range.
In addition to the standard range we offer made-to-drawing services for splined parts as well as broaching of both splined and Polygon profiles.

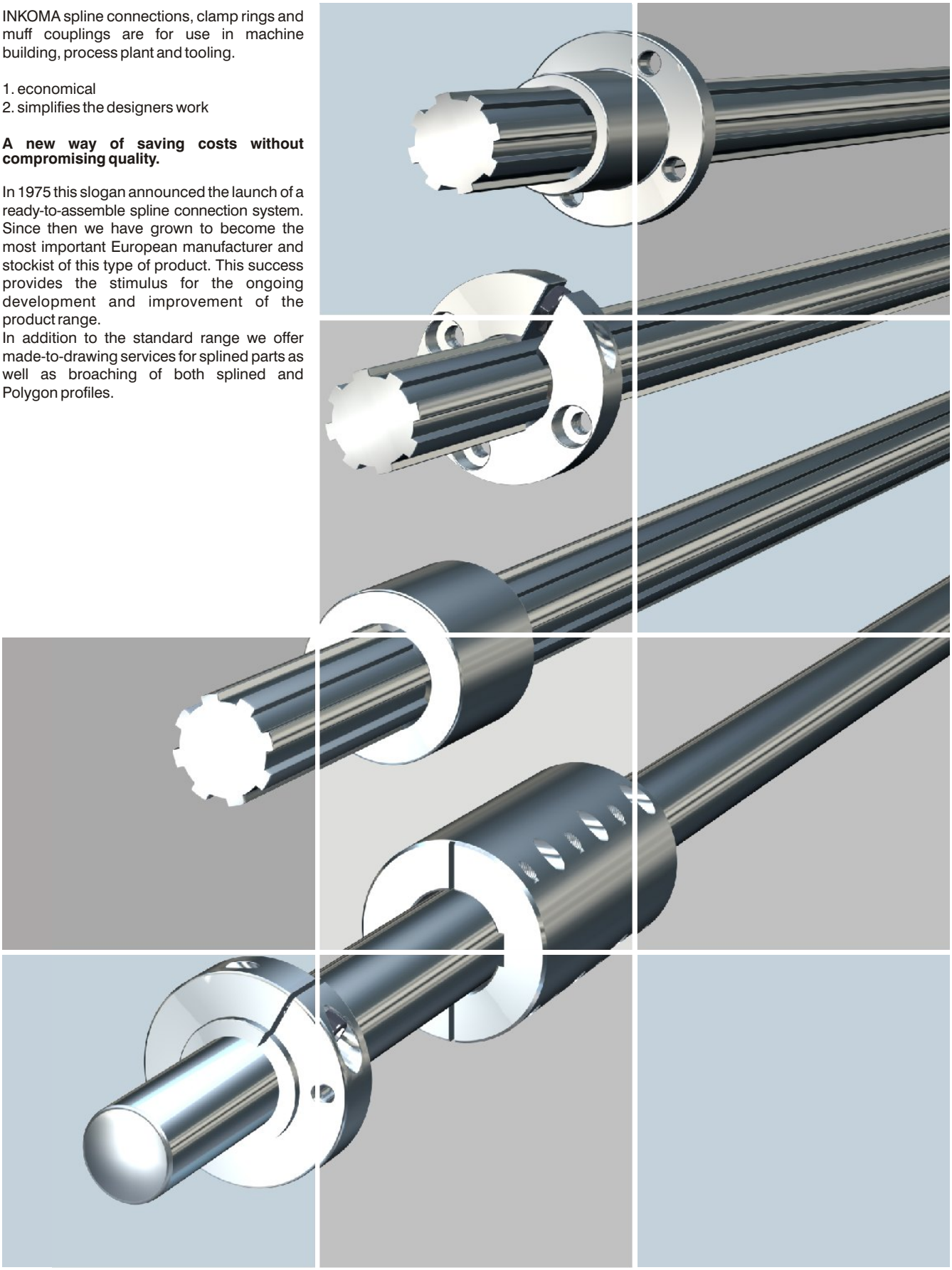

Pre-selection and calculation

Spline profile similar to ISO 14 (DIN 5463)

Strength calculation:

Basics for calculation spline profile:

Explanation:

d_1	[mm]	inner circle diameter
d_2	[mm]	outer circle diameter
f_w	[-]	loading factor: steady 1 variable 0,5 reversing 0,25
h	[mm]	height of spline
l	[mm]	hub length
n	[-]	number of splines
p	[N/mm²]	specific contact stress

A	[mm²]	cross sectional area of spline
D_M	[mm]	average diameter
G	[N/cm²]	moduls of rigidity ($80 \cdot 10^5$ N/cm² for steel)
J_P	[mm⁴]	polar moment of inertia
T_t	[Nm]	torsional moment
W_P	[mm³]	polar moment of resistance
τ	[N/mm²]	torsional strain
ϑ	[°/cm]	torsional displacement

Pre-selection of splines:
When the torque T_t to be transmitted is known the required spline can be determined using the graph. Curves I, II and III apply to the load factor (steady, variable and reversing loading).

Pre-selection of splines

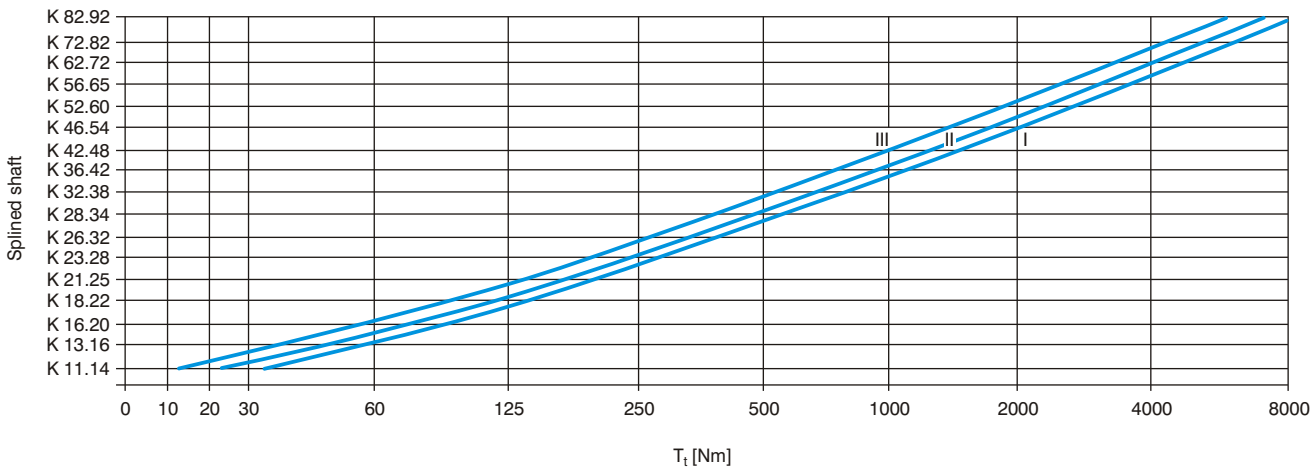

Pre-selection and calculation

Spline profile similar to ISO 14 (DIN 5463)

Shaft and hub calculation:

Shaft:

Torsional strain $\tau = \frac{T_t \cdot 10^3}{W_p \cdot f_w} \leq \tau_{perm.}$

$W_p \approx 0{,}024 \cdot (d_2 + d_1)^3$

Torsional displacement $\vartheta = \frac{180°}{\pi} \cdot \frac{T_t \cdot 10^6}{G \cdot J_p}$

$J_p = 0{,}006 \cdot (d_2 + d_1)^4$

Hub:

Specific contact stress $p = \frac{T_t \cdot 2000}{h \cdot l \cdot n \cdot D_M \cdot 0{,}75} \leq p_{perm.}$

$h = 0{,}5 \cdot (d_2 - d_1)$

$D_M = 0{,}5 \cdot (d_2 + d_1)$

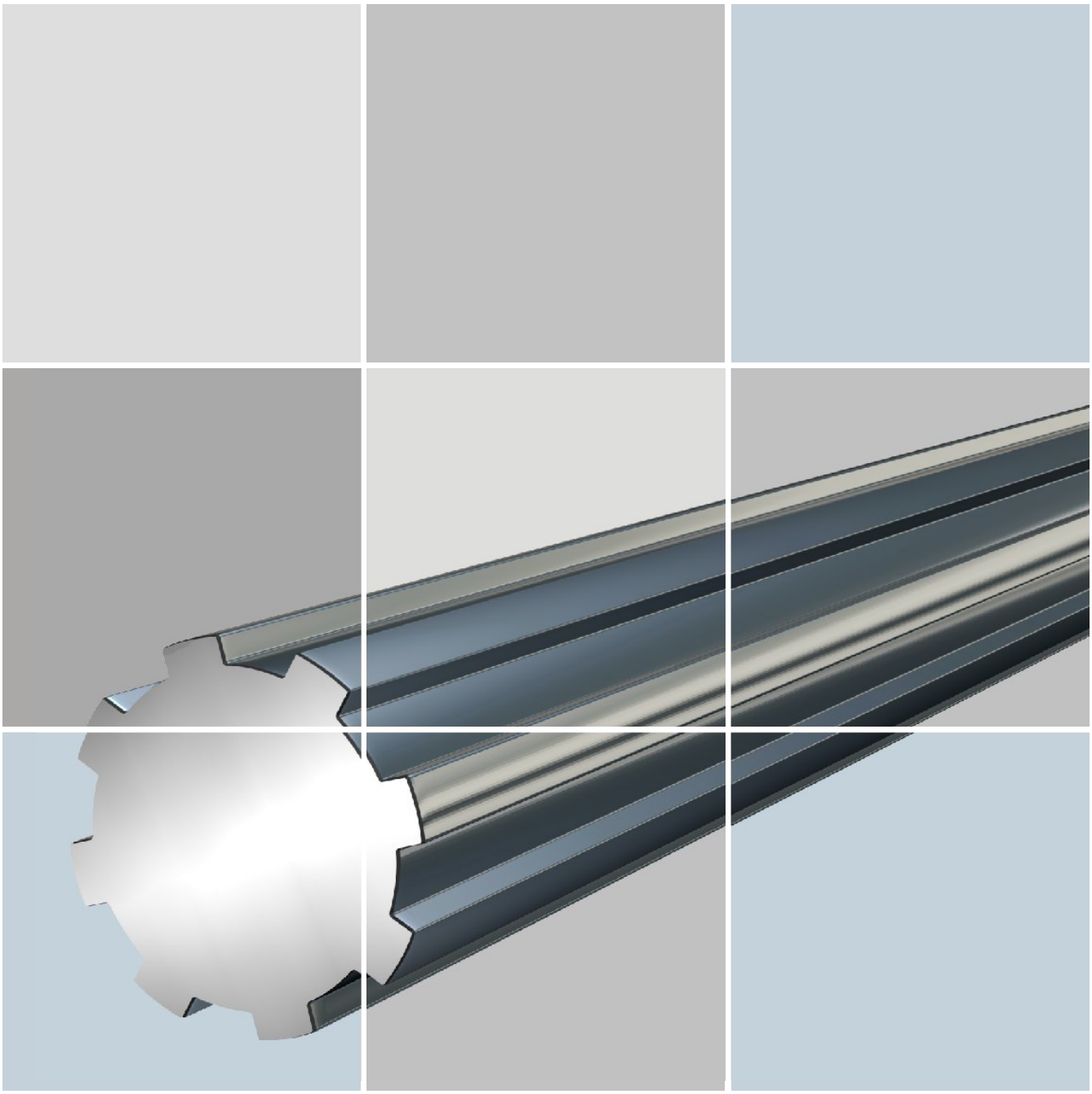

Dimensions

Splined shaft (cold drawn)

The INKOMA-splined shafts are cold drawn and similar to ISO 14 (DIN 5463).

Supplied in:
• Steel Ck 45 St

Standard lengths of 3 to 6 m are supplied or machined to customer requirements.
When ordering a specific length please note that shafts are sawn to length and are not straightened. Should straightening be required we can carry this out at our factory.
Other variants (material, tolerance), and sizes from K 52.60 to K 82.92, are also available by request, as machined shafts.

n= number of splines

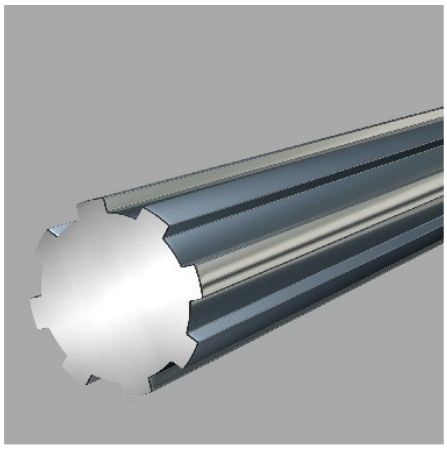

Ordering example:

Splined shaft
Diameter d_1
Diameter d_2
Material

K 26.32 St

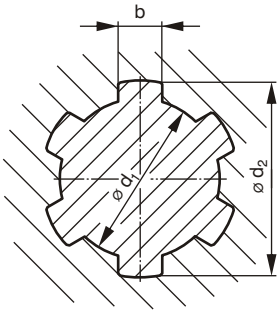

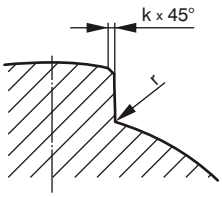

Splined shaft - hub

The INKOMA-splined hubs are made to ISO 14 (DIN 5463).

Supplied in:
• Steel C 45 St
• Bronze Bz 12 Bz
other materials and surface treatments are supplied.
Please enquire.

n= number of splines

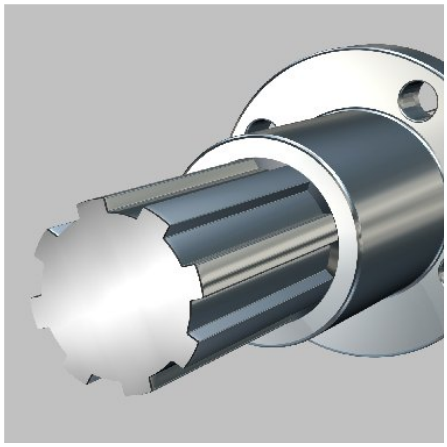

Ordering example:

Splined shaft - hub
Diameter d_1
Diameter d_2
Material

H 26.32 St

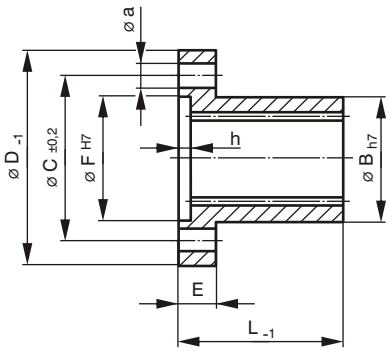

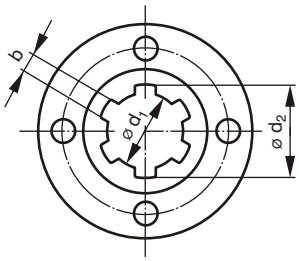

Order code	Dimensions [mm]									A [mm²]	Mass [kg/m]
					Tolerances						
	n	b	d_1	d_2	b	d_1	d_2	k	r		
K 11.14	6	3	11	14	0 / -0,08	-0,01 / -0,08	-0,07 / -0,20	0,2	0,2	121,9	0,95
K 13.16	6	3,5	13	16	0 / -0,08	-0,01 / -0,08	-0,07 / -0,20	0,2	0,2	164,1	1,29
K 16.20	6	4	16	20	0 / -0,08	-0,01 / -0,08	-0,07 / -0,25	0,2	0,2	243,4	1,91
K 18.22	6	5	18	22	0 / -0,08	-0,01 / -0,08	-0,07 / -0,25	0,2	0,2	312,4	2,45
K 21.25	6	5	21	25	0 / -0,08	-0,01 / -0,08	-0,07 / -0,27	0,2	0,2	399,8	3,14
K 23.28	6	6	23	28	0 / -0,08	-0,01 / -0,08	-0,07 / -0,27	0,3	0,2	505,2	3,96
K 26.32	6	6	26	32	0 / -0,08	-0,01 / -0,08	-0,07 / -0,27	0,3	0,3	638,6	5,01
K 28.34	6	7	28	34	0 / -0,08	-0,01 / -0,08	-0,07 / -0,27	0,3	0,3	741,4	5,82
K 32.38	8	6	32	38	0 / -0,08	-0,01 / -0,08	-0,07 / -0,27	0,3	0,3	947,8	7,43
K 36.42	8	7	36	42	0 / -0,08	-0,01 / -0,08	-0,07 / -0,27	0,3	0,3	1185,3	9,30
K 42.48	8	8	42	48	0 / -0,08	-0,01 / -0,08	-0,07 / -0,27	0,3	0,3	1576,7	12,37
K 46.54	8	9	46	54	0 / -0,08	-0,01 / -0,08	-0,07 / -0,27	0,3	0,4	1949,0	15,30

Stocked lengths 3 - 6 m, other length available. Please enquire.
Special profiles are available. Please enquire.

Order code	Dimensions [mm]															Mass [kg]
					Tolerances											
	n	b	d_1	d_2	b	d_1	d_2	B	C	D	E	F	L	a	h	
H 11.14	6	3	11	14	+0,045 / +0,020	+0,018 / 0	+0,11 / 0	20	28	38	8	18	30	4,3	3	0,11
H 13.16	6	3,5	13	16	+0,060 / +0,030	+0,018 / 0	+0,11 / 0	24	32	43	8	20	30	4,3	3	0,14
H 16.20	6	4	16	20	+0,060 / +0,030	+0,018 / 0	+0,13 / 0	28	38	52	9	26	35	5,3	3	0,18
H 18.22	6	5	18	22	+0,060 / +0,030	+0,018 / 0	+0,13 / 0	30	40	54	9	28	40	5,3	3	0,23
H 21.25	6	5	21	25	+0,060 / +0,030	+0,021 / 0	+0,13 / 0	34	48	62	10	35	50	6,4	3,5	0,33
H 23.28	6	6	23	28	+0,060 / +0,030	+0,021 / 0	+0,13 / 0	36	50	64	10	35	55	6,4	3,5	0,43
H 26.32	6	6	26	32	+0,060 / +0,030	+0,021 / 0	+0,16 / 0	42	56	69	10	40	60	6,4	3,5	0,55
H 28.34	6	7	28	34	+0,076 / +0,030	+0,021 / 0	+0,16 / 0	46	60	78	14	45	60	8,4	4	0,85
H 32.38	8	6	32	38	+0,060 / +0,030	+0,025 / 0	+0,16 / 0	50	65	82	14	45	70	8,4	4	1,05
H 36.42	8	7	36	42	+0,076 / +0,040	+0,025 / 0	+0,16 / 0	54	70	90	16	55	80	10,5	4	1,20
H 42.48	8	8	42	48	+0,076 / +0,040	+0,025 / 0	+0,16 / 0	60	75	95	16	60	90	10,5	4	1,32
H 46.54	8	9	46	54	+0,076 / +0,040	+0,025 / 0	+0,19 / 0	65	80	100	16	65	100	10,5	4	1,58
H 52.60	8	10	52	60	+0,076 / +0,040	+0,025 / 0	+0,19 / 0	75	93	115	18	75	110	13	4	2,60
H 56.65	8	10	56	65	+0,076 / +0,040	+0,030 / 0	+0,19 / 0	80	100	124	18	80	120	13	4	3,10
H 62.72	8	12	62	72	+0,080 / +0,040	+0,030 / 0	+0,19 / 0	90	110	134	18	90	130	13	4	4,20
H 72.82	10	12	72	82	+0,080 / +0,040	+0,030 / 0	+0,19 / 0	100	122	154	20	100	140	17	4	5,50
H 82.92	10	12	82	92	+0,080 / +0,040	+0,035 / 0	+0,22 / 0	110	135	164	25	110	150	17	4	6,80

Special sizes according to your drawing.

Dimensions

Splined shafts - clamp ring

The INKOMA-splined clamp rings are made to ISO 14 (DIN 5463).

Supplied in:
- Steel C 45 St
- Bronze Bz 12 Bz

other materials and surface treatments are supplied.
Please enquire.

n= number of splines

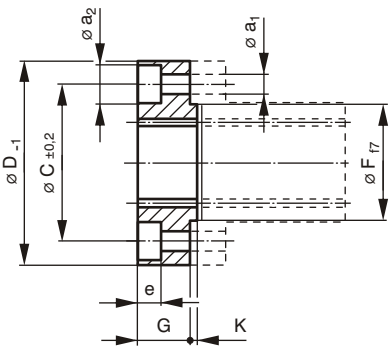

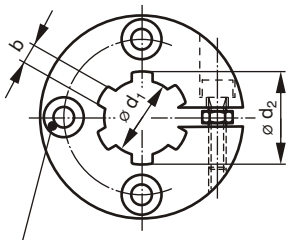

For cap head screw ISO 4762 (DIN 912)

Ordering example:

Splined shafts - clamp ring
Diameter d_1
Diameter d_2
Material

KR 26.32 St

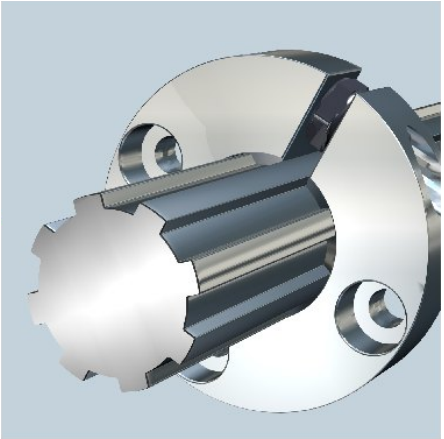

Splined shafts - sliding nave

The INKOMA-splined sliding naves are made to ISO 14 (DIN 5463).

Supplied in:
- Steel C 45 St
- Bronze Bz 12 Bz

other materials and surface treatments are supplied.
Please enquire.

n= number of splines

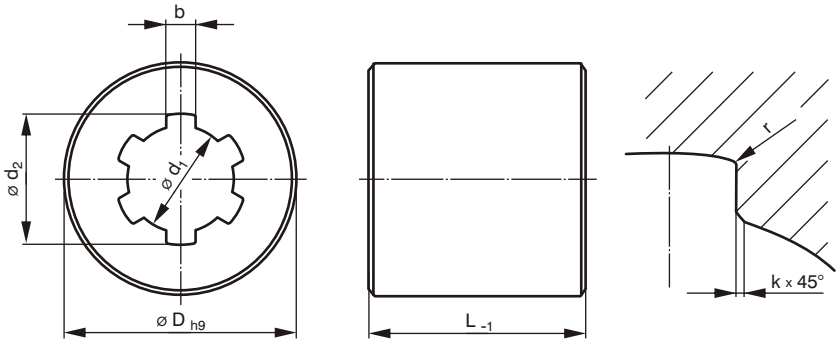

Ordering example:

Splined shafts - sliding nave
Diameter d_1
Diameter d_2
Material

SH 11.14 St

Splined shafts - sub-contract machining

In addition to our range of standard items broached with splined and Polygon profiles we offer a wide range of other internal forms. E.g. keyways, serrations to DIN 5481, involutes to DIN 5480 and 5482, etc.

Please enquire about special internal profiles.
We will be pleased to assist.

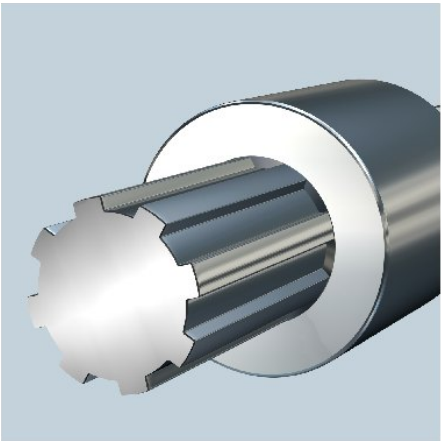

Order code	Dimensions [mm]															Mass [kg/m]
					Tolerances											
	n	b	d_1	d_2	b	d_1	d_2	C	D	F	G	K	a_1	a_2	e	
KR 11.14	6	3	11	14	+0,045 / +0,020	+0,018 / 0	+0,11 / 0	28	38	18	11	2	4,3	8	5	0,11
KR 13.16	6	3,5	13	16	+0,060 / +0,030	+0,018 / 0	+0,11 / 0	32	45	20	12	2	4,3	8	5	0,14
KR 16.20	6	4	16	20	+0,060 / +0,030	+0,018 / 0	+0,13 / 0	38	52	26	14	2	5,3	10	6	0,18
KR 18.22	6	5	18	22	+0,060 / +0,030	+0,018 / 0	+0,13 / 0	40	54	28	14	2	5,3	10	6	0,23
KR 21.25	6	5	21	25	+0,060 / +0,030	+0,021 / 0	+0,13 / 0	48	62	35	14	3	6,4	11	7	0,33
KR 23.28	6	6	23	28	+0,060 / +0,030	+0,021 / 0	+0,13 / 0	50	65	35	14	3	6,4	11	7	0,43
KR 26.32	6	6	26	32	+0,060 / +0,030	+0,021 / 0	+0,16 / 0	56	70	40	15	3	6,4	11	7	0,55
KR 28.34	6	7	28	34	+0,076 / +0,030	+0,021 / 0	+0,16 / 0	60	78	45	20	3	8,4	15	9	0,85
KR 32.38	8	6	32	38	+0,060 / +0,030	+0,025 / 0	+0,16 / 0	65	82	45	20	3	8,4	15	9	1,05
KR 36.42	8	7	36	42	+0,076 / +0,040	+0,025 / 0	+0,16 / 0	70	90	55	22	3	10,5	18	11	1,20
KR 42.48	8	8	42	48	+0,076 / +0,040	+0,025 / 0	+0,16 / 0	75	95	60	22	3	10,5	18	11	1,30
KR 46.54	8	9	46	54	+0,076 / +0,040	+0,025 / 0	+0,19 / 0	80	100	65	24	3	10,5	18	11	1,45
KR 52.60	8	10	52	60	+0,076 / +0,040	+0,025 / 0	+0,19 / 0	93	115	75	28	3	13,0	18,5	15	1,70
KR 56.65	8	10	56	65	+0,076 / +0,040	+0,030 / 0	+0,19 / 0	100	124	80	30	3	13,0	18,5	15	2,20
KR 62.72	8	12	62	72	+0,080 / +0,040	+0,030 / 0	+0,19 / 0	110	134	90	32	3	13,0	18,5	15	2,70
KR 72.82	10	12	72	82	+0,080 / +0,040	+0,030 / 0	+0,19 / 0	122	154	100	36	3	17,5	26	20	4,00
KR 82.92	10	12	82	92	+0,080 / +0,040	+0,035 / 0	+0,22 / 0	135	164	110	40	3	17,5	26	20	4,90

Special sizes according to your drawing.

Order code	Dimensions [mm]											Mass [kg]
					Tolerances							
	n	b	d_1	d_2	b	d_1	d_2	D	L	k	r	
SH 11.14	6	3	11	14	+0,045 / +0,020	+0,018 / 0	+0,11 / 0	28	22	0,3	0,2	0,11
SH 13.16	6	3,5	13	16	+0,060 / +0,030	+0,018 / 0	+0,11 / 0	32	26	0,3	0,2	0,15
SH 16.20	6	4	16	20	+0,060 / +0,030	+0,018 / 0	+0,13 / 0	35	32	0,3	0,2	0,25
SH 18.22	6	5	18	22	+0,060 / +0,030	+0,018 / 0	+0,13 / 0	40	36	0,3	0,2	0,36
SH 21.25	6	5	21	25	+0,060 / +0,030	+0,021 / 0	+0,13 / 0	45	42	0,3	0,2	0,52
SH 23.28	6	6	23	28	+0,060 / +0,030	+0,021 / 0	+0,13 / 0	50	46	0,3	0,2	0,65
SH 26.32	6	6	26	32	+0,060 / +0,030	+0,021 / 0	+0,16 / 0	55	52	0,4	0,3	0,85
SH 28.34	6	7	28	34	+0,076 / +0,030	+0,021 / 0	+0,16 / 0	60	56	0,4	0,3	0,95
SH 32.38	8	6	32	38	+0,060 / +0,030	+0,025 / 0	+0,16 / 0	65	64	0,4	0,3	1,25
SH 36.42	8	7	36	42	+0,076 / +0,040	+0,025 / 0	+0,16 / 0	70	72	0,4	0,3	1,62
SH 42.48	8	8	42	48	+0,076 / +0,040	+0,025 / 0	+0,16 / 0	75	80	0,4	0,3	2,15
SH 46.54	8	9	46	54	+0,076 / +0,040	+0,025 / 0	+0,19 / 0	80	90	0,5	0,5	2,45
SH 52.60	8	10	52	60	+0,076 / +0,040	+0,025 / 0	+0,19 / 0	90	100	0,5	0,5	3,10
SH 56.65	8	10	56	65	+0,076 / +0,040	+0,030 / 0	+0,19 / 0	105	110	0,5	0,5	5,00
SH 62.72	8	12	62	72	+0,080 / +0,040	+0,030 / 0	+0,19 / 0	115	120	0,5	0,5	6,70
SH 72.82	10	12	72	82	+0,080 / +0,040	+0,030 / 0	+0,19 / 0	135	130	0,6	0,6	10,10
SH 82.92	10	12	82	92	+0,080 / +0,040	+0,035 / 0	+0,22 / 0	145	140	0,6	0,6	11,90

Special sizes according to your drawing.

Order code	Pilot bore [mm]	Engaged length [mm]
K 11.14	⌀ 11 H7	12 - 30
K 13.16	⌀ 13 H7	20 - 45
K 16.20	⌀ 16 H7	16 - 40
K 18.22	⌀ 18 H7	16 - 40
K 21.25	⌀ 21 H7	20 - 50
K 23.28	⌀ 23 H7	20 - 55
K 26.32	⌀ 26 H7	28 - 70
K 28.34	⌀ 28 H7	24 - 65
K 32.38	⌀ 32 H7	30 - 85

Order code	Pilot bore [mm]	Engaged length [mm]
K 36.42	⌀ 36 H7	32 - 95
K 42.48	⌀ 42 H7	30 - 90
K 46.54	⌀ 46 H7	30 - 100
K 52.60	⌀ 52 H7	40 - 100
K 56.65	⌀ 56 H7	48 - 125
K 62.72	⌀ 62 H7	40 - 100
K 72.82	⌀ 72 H7	48 - 150
K 82.92	⌀ 82 H7	36 - 100

Dimensions

Muff couplings

The INKOMA-muff coupling is similar to DIN 115.

Supplied in:
- Steel C 45 St
- Stainless steel (1.4305) VA

other materials are supplied. Please enquire.

SKA:
for same shaft diameter d = 55 mm
muff coupling: SKA 55
SKB:
for different shaft diameters d = 55 mm and 60 mm
muff coupling: SKB 60/55

Should the diameters of the connected shafts differ widely the selection must be based on the larger shaft. Keyway to BS 4235 Pt. 1 (DIN 6885)
When enquiring or ordering state clearly whether or not a keyway is required.

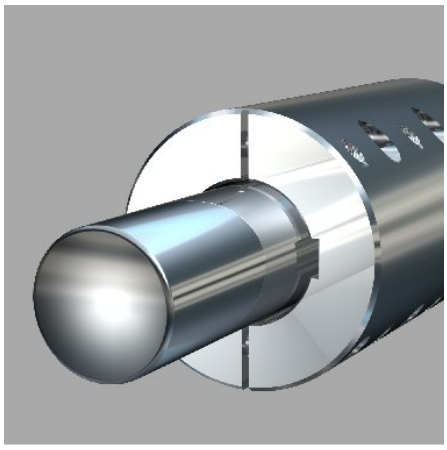

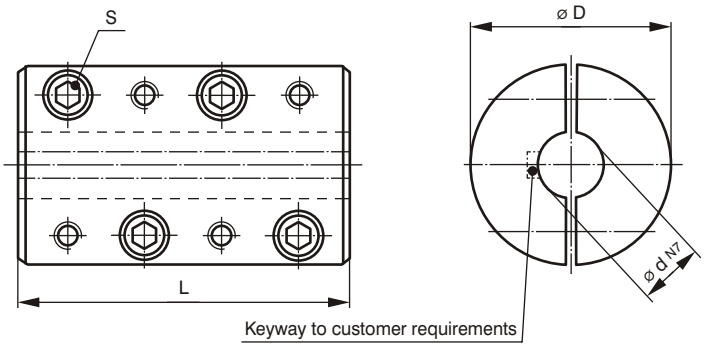

Ordering example:

Muff coupling
Bore d
Material

SKA 55 St

Clamp ring for cylindrical shafts

The INKOMA-clamp ring for cylindrical shafts:

Supplied in:
- Steel C 45 St
- Stainless steel (1.4305) VA

other materials are supplied. Please enquire.

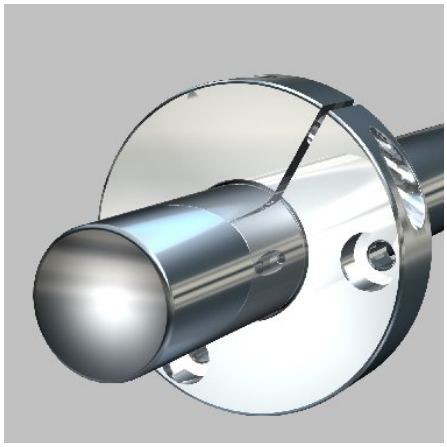

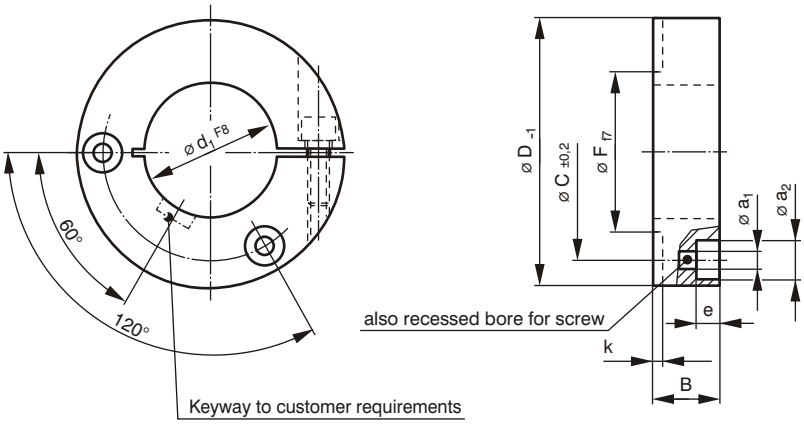

Ordering example:

Clamp ring (for cylindrical shafts)
Preferred bore d_1
Material

Gr 10 St

Order code	Dimensions [mm]			Operational data			Clamp screw	Mass
	Bore d	D	L	Torque with keyway T [Nm]	Torque without keyway T [Nm]	Mass moment of inertia J [kg m²]	S	[kg]
SKA 20	20	60	100	352	235	0,003	8xM8	2,20
SKA 25	25	80	130	668	445	0,004	8xM10	4,40
SKA 30	30	80	130	801	534	0,004	8xM10	4,20
SKA 35	35	80	160	1126	750	0,005	8xM10	4,80
SKA 40	40	80	160	1247	831	0,005	8xM10	4,50
SKA 45	45	100	190	1546	1230	0,013	8xM10	8,90
SKA 50	50	100	190	2052	1366	0,013	8xM10	8,35
SKA 55	55	120	220	3015	2010	0,032	8xM10	14,66
SKA 60	60	120	220	3286	2190	0,032	8xM10	13,90
SKA 70	70	140	250	4836	3224	0,066	10xM12	21,50
SKA 80	80	160	280	6804	4535	0,126	10xM12	31,50
SKA 90	90	180	310	8383	5588	0,223	12xM16	44,10
SKA 100	100	200	350	12480	8320	0,384	12xM16	61,50
SKA 110	110	220	390	15840	10560	0,627	12xM16	82,90
SKA 120	120	250	430	20646	13764	1,150	14xM16	118,00
SKA 140	140	280	490	32634	21756	2,100	14xM20	168,70
SKA 160	160	320	560	45120	30080	4,000	14xM24	251,00
SKA 180	180	360	630	67392	44928	7,300	14xM24	359,00
SKA 200	200	400	700	82680	55120	12,300	14xM27	492,00
SKA 220	220	450	770	109048	72730	21,800	16xM30	692,00
SKA 240	240	480	840	138384	92250	31,000	16xM30	850,00
SKA 260	260	520	910	164424	109160	45,600	16xM36	1080,00
SKA 280	280	570	980	205422	136900	71,300	16xM42	1400,00

Order code	Dimensions [mm]											Mass
	Preferred bore d_1	max. possible bore d_1	max. possible spigot diameter F [1)]	max. possible bore diameter at Ø F	B	C	D	a_1	a_2	e	k [1)]	[kg]
GR 10	10	25	25	20	20	42	59	6,8	14,5	9	2	0,30
GR 15	15	30	30	25	20	47	65	6,8	14,5	9	2	0,35
GR 20	20	35	35	30	20	52	70	6,8	14,5	9	2	0,47
GR 25	25	40	40	35	20	57	75	6,8	14,5	9	2	0,50
GR 30	30	45	45	40	20	62	80	6,8	14,5	9	2	0,60
GR 35	35	50	50	45	25	67	85	6,8	14,5	9	3,5	0,75
GR 40	40	55	55	50	25	72	90	6,8	14,5	9	3,5	0,85
GR 45	45	60	60	55	25	77	95	6,8	14,5	9	3,5	0,95
GR 50	50	65	65	60	25	81	100	6,8	14,5	9	3,5	1,10
GR 55	55	70	70	65	25	86	105	6,8	14,5	9	3,5	1,25
GR 60	60	75	75	70	25	90	108	6,8	14,5	9	3,5	1,40
GR 70	70	80	80	75	28	100	122	8,4	17,5	11	3,5	1,50
GR 80	80	90	90	85	28	110	132	8,4	17,5	11	3,5	1,60
GR 90	90	100	100	95	28	120	142	8,4	17,5	11	3,5	1,75
GR 100	100	110	110	105	28	130	152	8,4	17,5	11	3,5	1,95
GR 110	110	115	120	115	30	140	169	10,2	19,5	14	3,5	2,83
GR 120	120	125	130	125	30	150	179	10,2	19,5	14	3,5	3,80

[1)] Spigot according to customer requirement
Please state when ordering whether keyway or spigot is required.
ø d_1 also availabe threaded

Application example

Spline profile similar to ISO 14 (DIN 5463)

The combination of splined hub and clamp ring allows adjustment of the quality of fit.

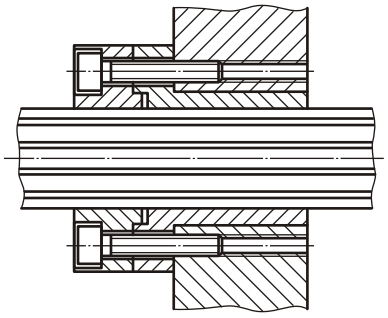

Splined clamp ring and sprocket. Secured using screws and dowels.

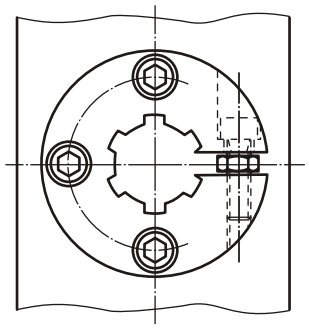

Double clamping for long components.

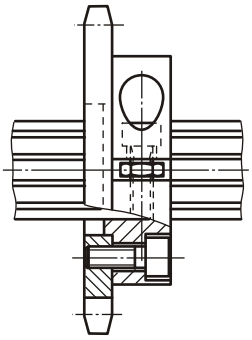

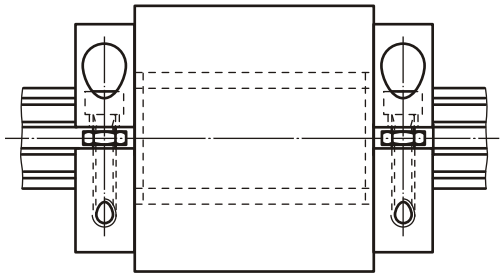

INKOMA-clamp ring GR: for positioning components on cylindrical shafts. These clamp rings are extremely versatile:

1. as delivered
2. the bore a_1 can be enlarged to suit the next size of socket head cap screw
3. the bore a_1 can be threaded. a_1 is then equivalent to the reference location diameter
4. in addition a locating spigot can be machined
5. d_1 can be bored larger or threaded for use as a clamping nut
6. the clamp ring can be supplied with or without a keyway

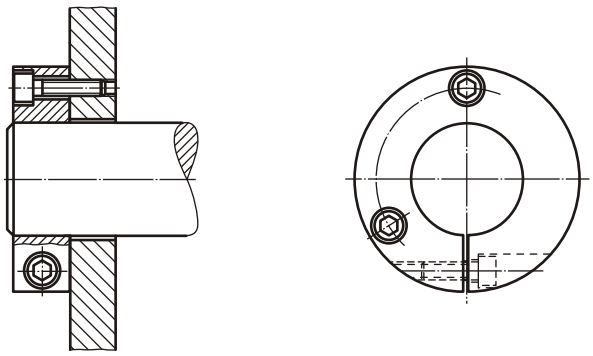

INKOMA muff couplings SKA/ SKB: provide a rigid connection between two shafts having the same or different diameters.

Supplied in two versions:

1. **SKA** for same shaft diameter, with keyway if required.
2. **SKB** for different shaft diameter, with keyway if required.